Compal Confidential

HGW51 Schematics Document

AMD/Sempron/ATI RS482M/SB450

2005 / 08 / 18 Rev:0.3 For C test

Security Classification	Compal Secret Data		
Issued Date	2005/05/09	Deciphered Date	2006/03/08

THIS SHEET OF ENGINEERING DRAWING IS THE PROPRIETARY PROPERTY OF COMPAL ELECTRONICS, INC. AND CONTAINS CONFIDENTIAL AND TRADE SECRET INFORMATION. THIS SHEET MAY NOT BE TRANSFERED FROM THE CUSTODY OF THE COMPETENT DIVISION OF R&D DEPARTMENT EXCEPT AS AUTHORIZED BY COMPAL ELECTRONICS, INC. NEITHER THIS SHEET NOR THE INFORMATION IT CONTAINS MAY BE USED BY OR DISCLOSED TO ANY THIRD PARTY WITHOUT PRIOR WRITTEN CONSENT OF COMPAL ELECTRONICS, INC.

Title	Cover Sheet	
Size Custom	Document Number LA-2931	Rev 0.3
Date: Thursday, August 18, 2005	Sheet 1 of 48	

http://hobi-elektronika.net

Compal confidential

Project Code: HGW51

File Name : LA-2931

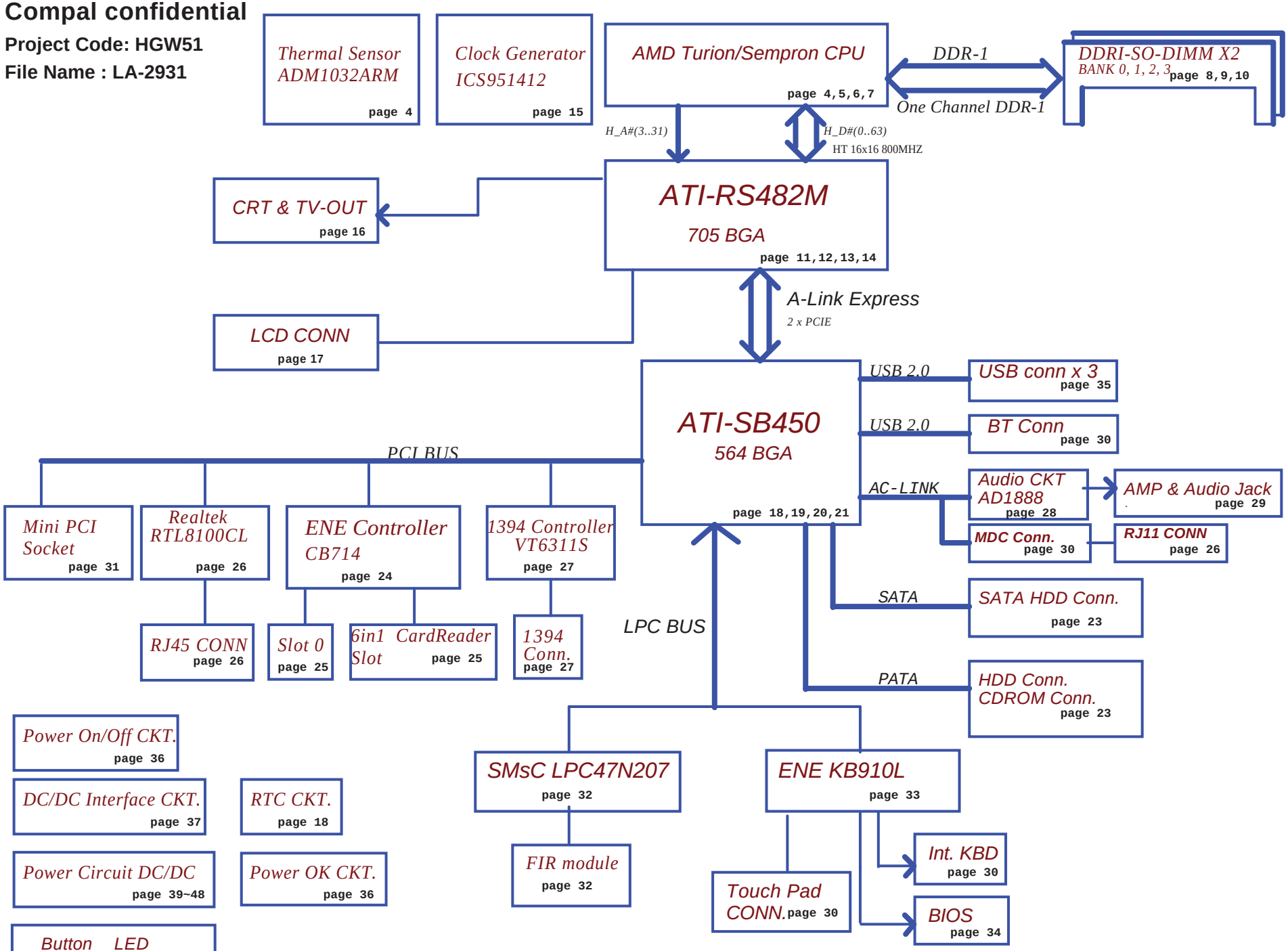

Security Classification	Compal Secret Data		
Issued Date	2005/05/09	Deciphered Date	2006/03/08

THIS SHEET OF ENGINEERING DRAWING IS THE PROPRIETARY PROPERTY OF COMPAL ELECTRONICS, INC. AND CONTAINS CONFIDENTIAL AND TRADE SECRET INFORMATION. THIS SHEET MAY NOT BE TRANSFERED FROM THE CUSTODY OF THE COMPETENT DIVISION OF R&D DEPARTMENT EXCEPT AS AUTHORIZED BY COMPAL ELECTRONICS, INC. NEITHER THIS SHEET NOR THE INFORMATION IT CONTAINS MAY BE USED BY OR DISCLOSED TO ANY THIRD PARTY WITHOUT PRIOR WRITTEN CONSENT OF COMPAL ELECTRONICS, INC.

Title	Block Diagrams	
Size Custom	Document Number LA-2931	Rev 0.3
Date: Thursday, August 18, 2005	Sheet 2 of 48	

http://hobi-elektronika.net

Voltage Rails

Power Plane	Description	S1	S3	S4/ S5
VIN	Adapter power supply (19V)	N/A	N/A	N/A
B+	AC or battery power rail for power circuit.	N/A	N/A	N/A
+CPU_CORE	Core voltage for CPU	ON	OFF	OFF
+1.05VS	1.05V switched power rail	ON	OFF	OFF
+DDRVTT	0.9V switched power rail for DDR terminator	ON	OFF	OFF
+1.5VALW	1.5V always on power rail	ON	ON	ON*
+1.5VS	1.5V switched power rail	ON	OFF	OFF
+1.8VS	1.8V switched power rail	ON	OFF	OFF
+DDRVCC	1.8V power rail for DDR	ON	ON	OFF
+2.5VS	2.5V switched power rail	ON	OFF	OFF
+3VALW	3.3V always on power rail	ON	ON	ON*
+3V	3.3V power rail	ON	ON	OFF
+3VS	3.3V switched power rail	ON	OFF	OFF
+5VALW	5V always on power rail	ON	ON	ON*
+5VS	5V switched power rail	ON	OFF	OFF
+5VMOD	5V switched power rail for Module Bay	ON	OFF	OFF
+12VALW	12V always on power rail	ON	ON	ON*
+RTCVCC	RTC power	ON	ON	ON

Note : ON* means that this power plane is ON only with AC power available, otherwise it is OFF.

External PCI Devices

Device	IDSEL#	REQ#/GNT#	Interrupts
CardBus	AD20	2	PIRQE/PIRQH
1394	AD16	0	PIRQE
SD	AD20	2	PIRQE/PIRQH
Mini-PCI	AD18	1	PIRQF
LAN	AD22	3	PIRQG

EC SM Bus1 address

Device	Address
Smart Battery	0001 011X b
EEPROM(24C16/02)	1010 000X b
(24C04)	1011 000Xb

EC SM Bus2 address

Device	Address
ADM1032	1001 110X b

SB450 SM Bus address

Device	Address
Clock Generator (ICS 951412AGT)	1101 001Xb
DDRII DIMM0	1001 000Xb
DDRII DIMM2	1001 010Xb

STATE \ SIGNAL	SLP_S1#	SLP_S3#	SLP_S4#	SLP_S5#	+VALW	+V	+VS	Clock
Full ON	HIGH	HIGH	HIGH	HIGH	ON	ON	ON	ON
S1(Power On Suspend)	LOW	HIGH	HIGH	HIGH	ON	ON	ON	LOW
S3 (Suspend to RAM)	LOW	LOW	HIGH	HIGH	ON	ON	OFF	OFF
S4 (Suspend to Disk)	LOW	LOW	LOW	HIGH	ON	OFF	OFF	OFF
S5 (Soft OFF)	LOW	LOW	LOW	LOW	ON	OFF	OFF	OFF

Board ID Table for AD channel

Vcc	3.3V +/- 5%
Ra / Rc	100K +/- 5%

Board ID	Rb / Rd	V_{AD_BID} min	V_{AD_BID} typ	V_{AD_BID} max
0	0	0 V	0 V	0 V
1	8.2K +/- 5%	0.216 V	0.250 V	0.289 V
2	18K +/- 5%	0.436 V	0.503 V	0.538 V
3	33K +/- 5%	0.712 V	0.819 V	0.875 V
4	56K +/- 5%	1.036 V	1.185 V	1.264 V
5	100K +/- 5%	1.453 V	1.650 V	1.759 V
6	200K +/- 5%	1.935 V	2.200 V	2.341 V
7	NC	2.500 V	3.300 V	3.300 V

BOARD ID Table

Board ID	PCB Revision
0	0.1
1	0.2
2	
3	
4	
5	
6	
7	

BTO Option Table

BTO Item	BOM Structure

http://hobi-elektronika.net

Security Classification	Compal Secret Data		
Issued Date	2005/03/08	Deciphered Date	2006/03/08

THIS SHEET OF ENGINEERING DRAWING IS THE PROPRIETARY PROPERTY OF COMPAL ELECTRONICS, INC. AND CONTAINS CONFIDENTIAL AND TRADE SECRET INFORMATION. THIS SHEET MAY NOT BE TRANSFERED FROM THE CUSTODY OF THE COMPETENT DIVISION OF R&D DEPARTMENT EXCEPT AS AUTHORIZED BY COMPAL ELECTRONICS, INC. NEITHER THIS SHEET NOR THE INFORMATION IT CONTAINS MAY BE USED BY OR DISCLOSED TO ANY THIRD PARTY WITHOUT PRIOR WRITTEN CONSENT OF COMPAL ELECTRONICS, INC.

Title	Notes	
Size Custom	Document Number EFL50 LA-2761	Rev 0.3
Date: Thursday, August 18, 2005	Sheet 3 of 48	

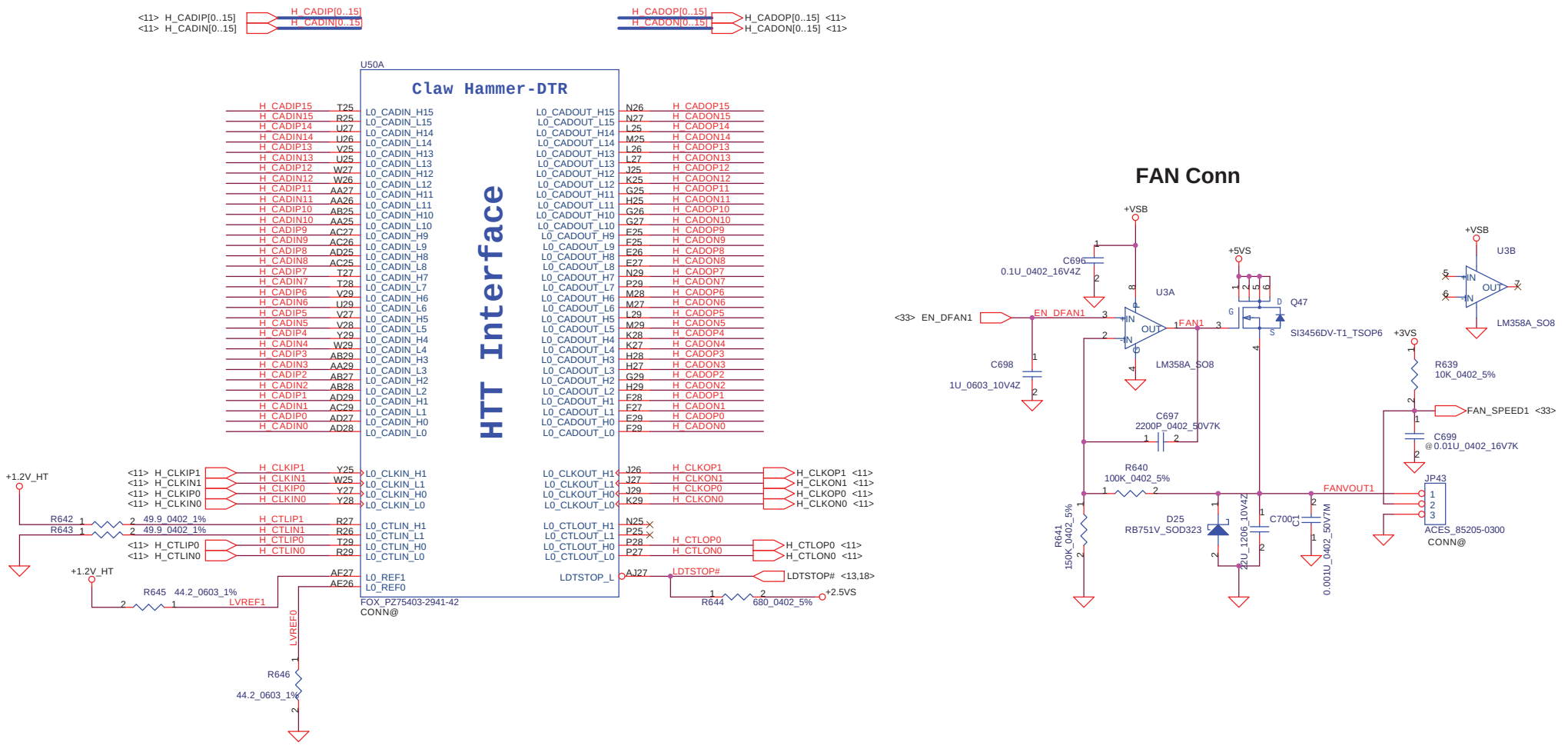

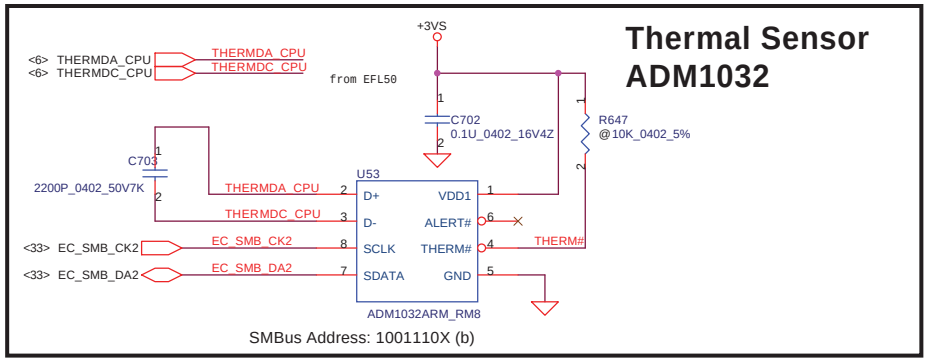

Security Classification	Compal Secret Data		
Issued Date	2005/05/09	Deciphered Date	2006/03/11

THIS SHEET OF ENGINEERING DRAWING IS THE PROPRIETARY PROPERTY OF COMPAL ELECTRONICS, INC. AND CONTAINS CONFIDENTIAL AND TRADE SECRET INFORMATION. THIS SHEET MAY NOT BE TRANSFERED FROM THE CUSTODY OF THE COMPETENT DIVISION OF R&D DEPARTMENT EXCEPT AS AUTHORIZED BY COMPAL ELECTRONICS, INC. NEITHER THIS SHEET NOR THE INFORMATION IT CONTAINS MAY BE USED BY OR DISCLOSED TO ANY THIRD PARTY WITHOUT PRIOR WRITTEN CONSENT OF COMPAL ELECTRONICS, INC.

Title: **Claw Harmmer CPU (Host Bus)**

Size: Custom | Document Number: **LA-2931** | Rev: 0.3

Date: Thursday, August 18, 2005 | Sheet 4 of 48

http://hobi-elektronika.net

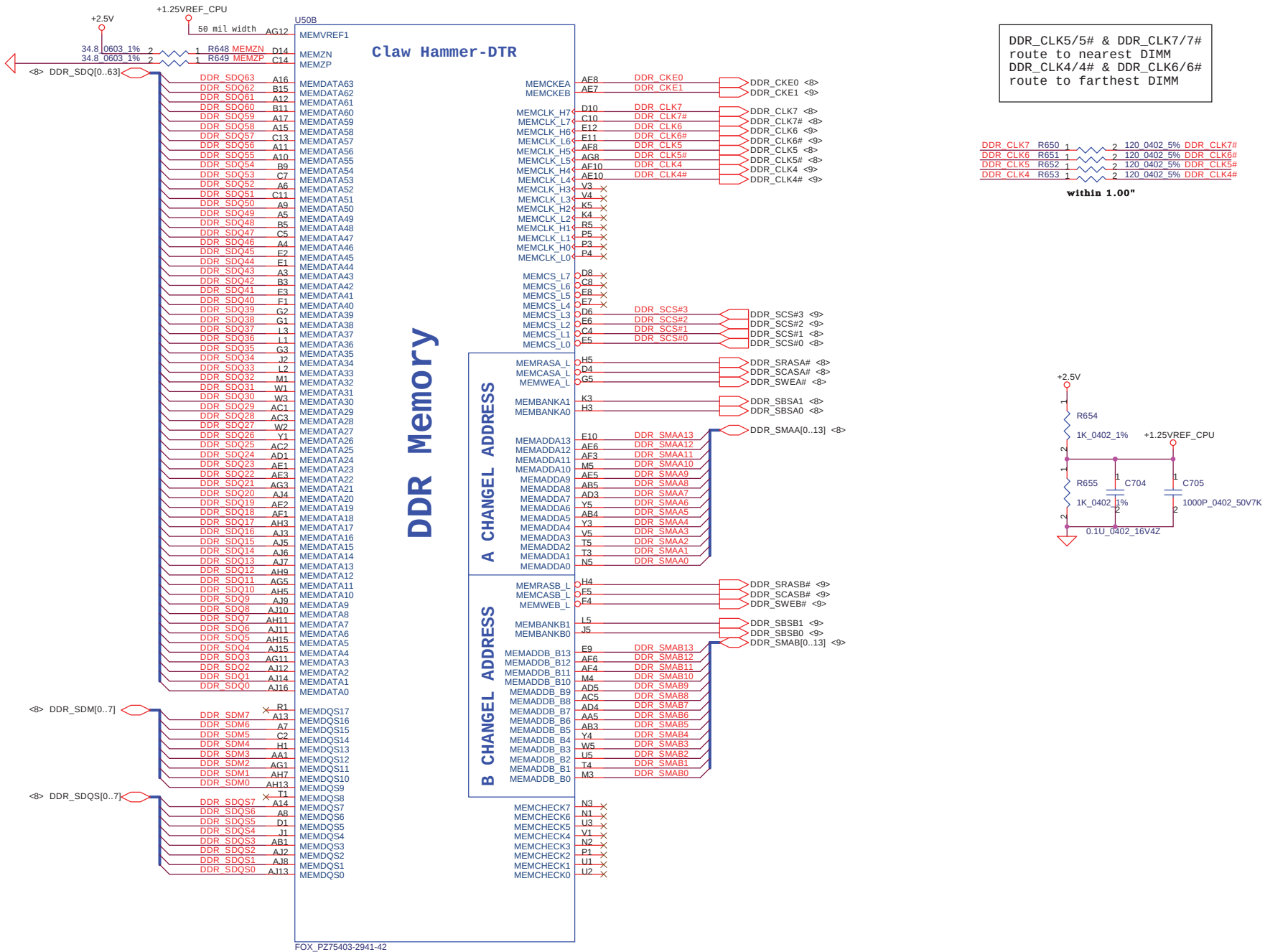

Security Classification	Compal Secret Data		
Issued Date	2005/03/01	Deciphered Date	2006/03/11

THIS SHEET OF ENGINEERING DRAWING IS THE PROPRIETARY PROPERTY OF COMPAL ELECTRONICS, INC. AND CONTAINS CONFIDENTIAL AND TRADE SECRET INFORMATION. THIS SHEET MAY NOT BE TRANSFERED FROM THE CUSTODY OF THE COMPETENT DIVISION OF R&D DEPARTMENT EXCEPT AS AUTHORIZED BY COMPAL ELECTRONICS, INC. NEITHER THIS SHEET NOR THE INFORMATION IT CONTAINS MAY BE USED BY OR DISCLOSED TO ANY THIRD PARTY WITHOUT PRIOR WRITTEN CONSENT OF COMPAL ELECTRONICS, INC.

Title: **Claw Harmmer (Memory Bus)**

Size: Custom | Document Number: **LA-2931** | Rev: 0.3

Date: Thursday, August 18, 2005 | Sheet 5 of 48

http://hobi-elektronika.net

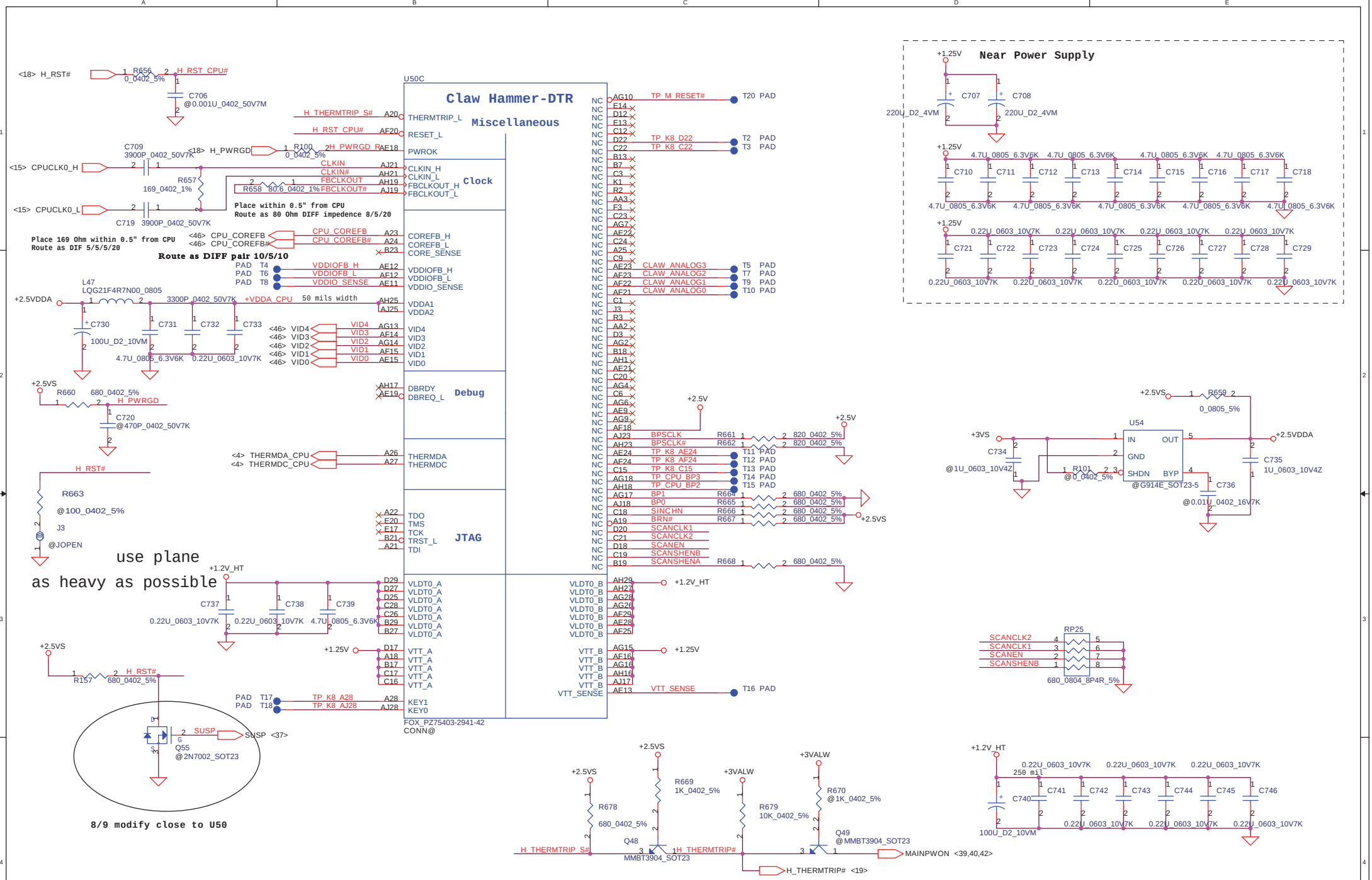

Security Classification	Compal Secret Data		
Issued Date	2005/03/01	Deciphered Date	2006/03/11

THIS SHEET OF ENGINEERING DRAWING IS THE PROPRIETARY PROPERTY OF COMPAL ELECTRONICS, INC. AND CONTAINS CONFIDENTIAL AND TRADE SECRET INFORMATION. THIS SHEET MAY NOT BE TRANSFERED FROM THE CUSTODY OF THE COMPETENT DIVISION OF R&D DEPARTMENT EXCEPT AS AUTHORIZED BY COMPAL ELECTRONICS, INC. NEITHER THIS SHEET NOR THE INFORMATION IT CONTAINS MAY BE USED BY OR DISCLOSED TO ANY THIRD PARTY WITHOUT PRIOR WRITTEN CONSENT OF COMPAL ELECTRONICS, INC.

Title: **Claw Harmmer (MISC)**

Size: Custom | Document Number: **LA-2931** | Rev: 0.3

Date: Thursday, August 18, 2005 | Sheet 6 of 48

http://hobi-elektronika.net

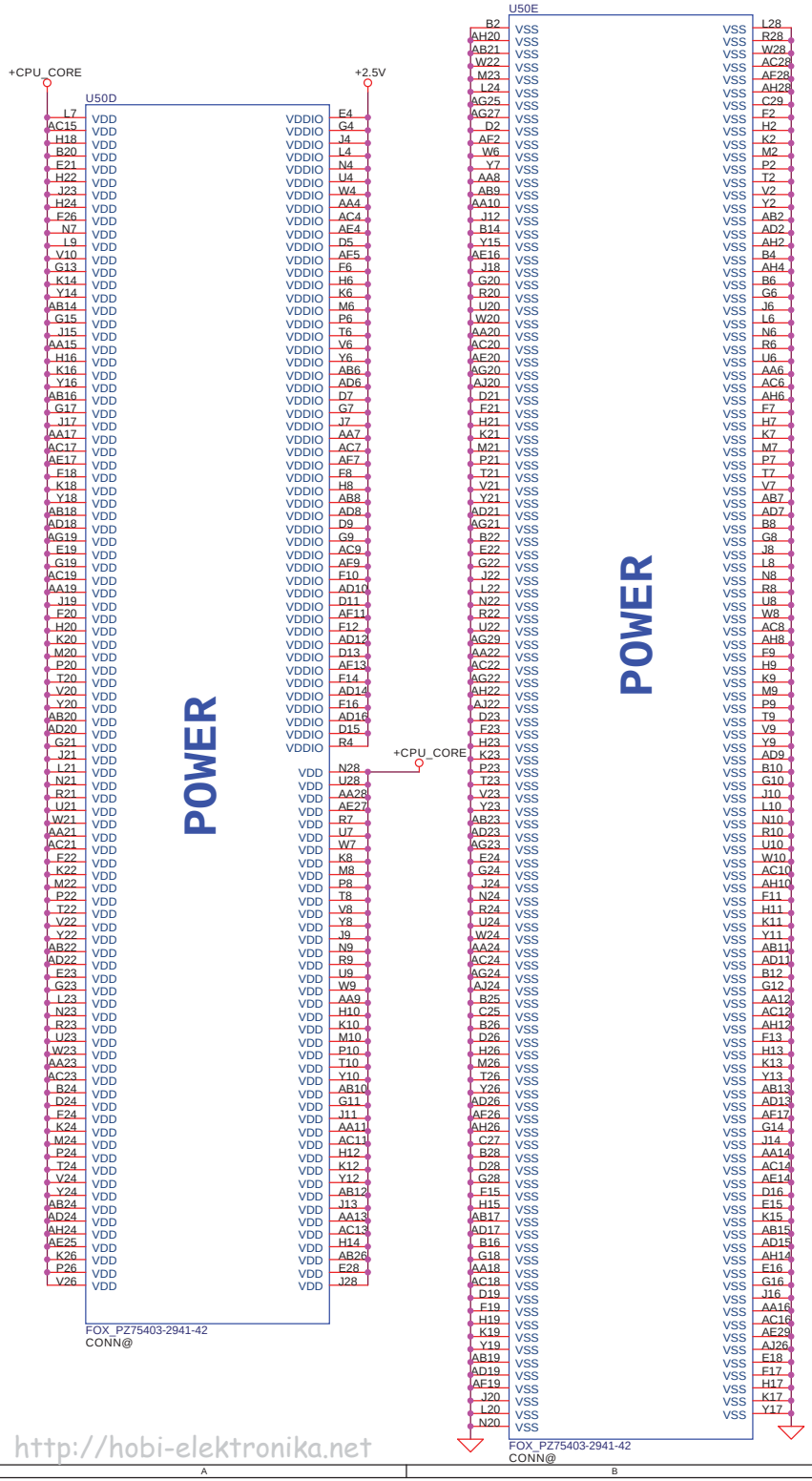

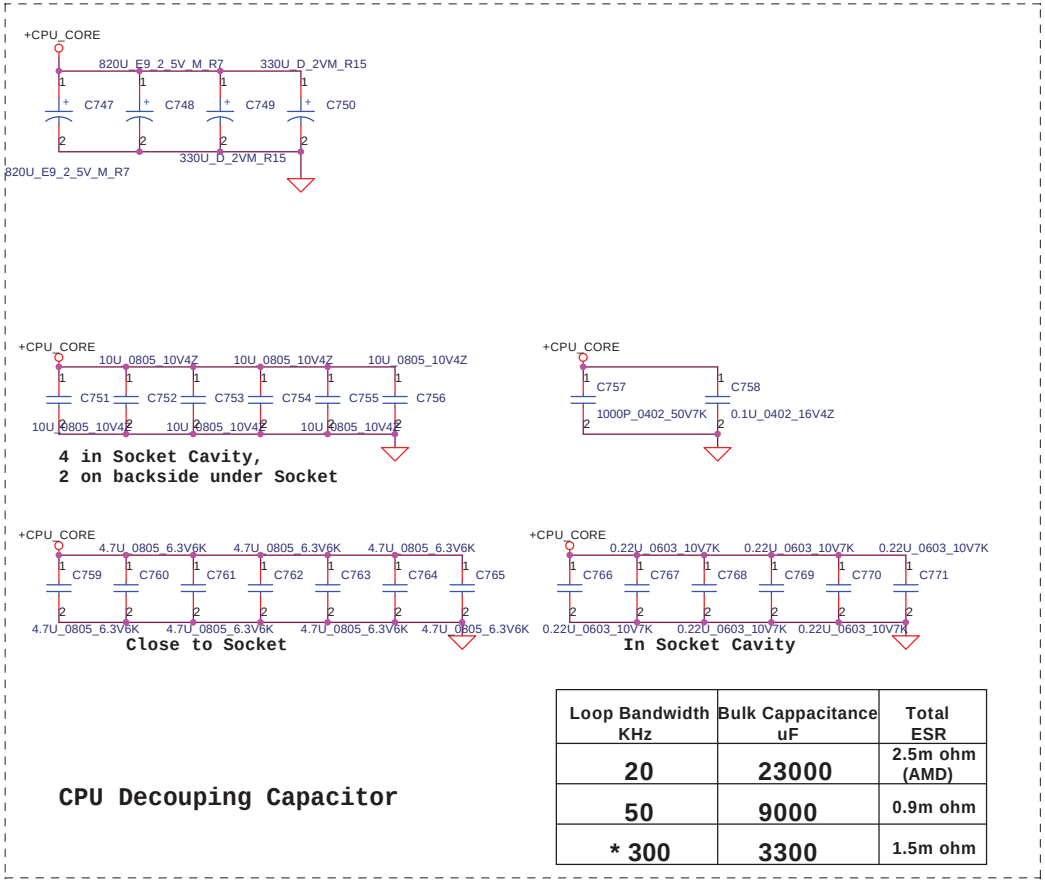

CPU Decouping Capacitor

Loop Bandwidth KHz	Bulk Cappacitance uF	Total ESR
20	23000	2.5m ohm (AMD)
50	9000	0.9m ohm
* 300	3300	1.5m ohm

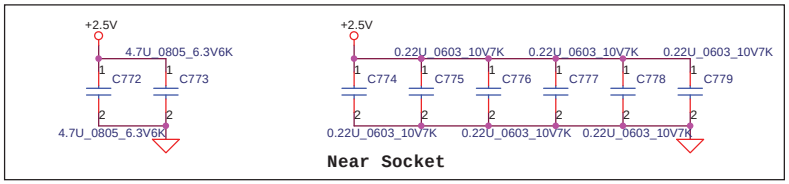

Security Classification	Compal Secret Data		
Issued Date	2005/03/01	Deciphered Date	2006/03/11

THIS SHEET OF ENGINEERING DRAWING IS THE PROPRIETARY PROPERTY OF COMPAL ELECTRONICS, INC. AND CONTAINS CONFIDENTIAL AND TRADE SECRET INFORMATION. THIS SHEET MAY NOT BE TRANSFERED FROM THE CUSTODY OF THE COMPETENT DIVISION OF R&D DEPARTMENT EXCEPT AS AUTHORIZED BY COMPAL ELECTRONICS, INC. NEITHER THIS SHEET NOR THE INFORMATION IT CONTAINS MAY BE USED BY OR DISCLOSED TO ANY THIRD PARTY WITHOUT PRIOR WRITTEN CONSENT OF COMPAL ELECTRONICS, INC.

Title: Claw Harmmer (Power & Ground)

Size: Custom | Document Number: LA-2931 | Rev: 0.3

Date: Thursday, August 18, 2005 | Sheet 7 of 48

http://hobi-elektronika.net

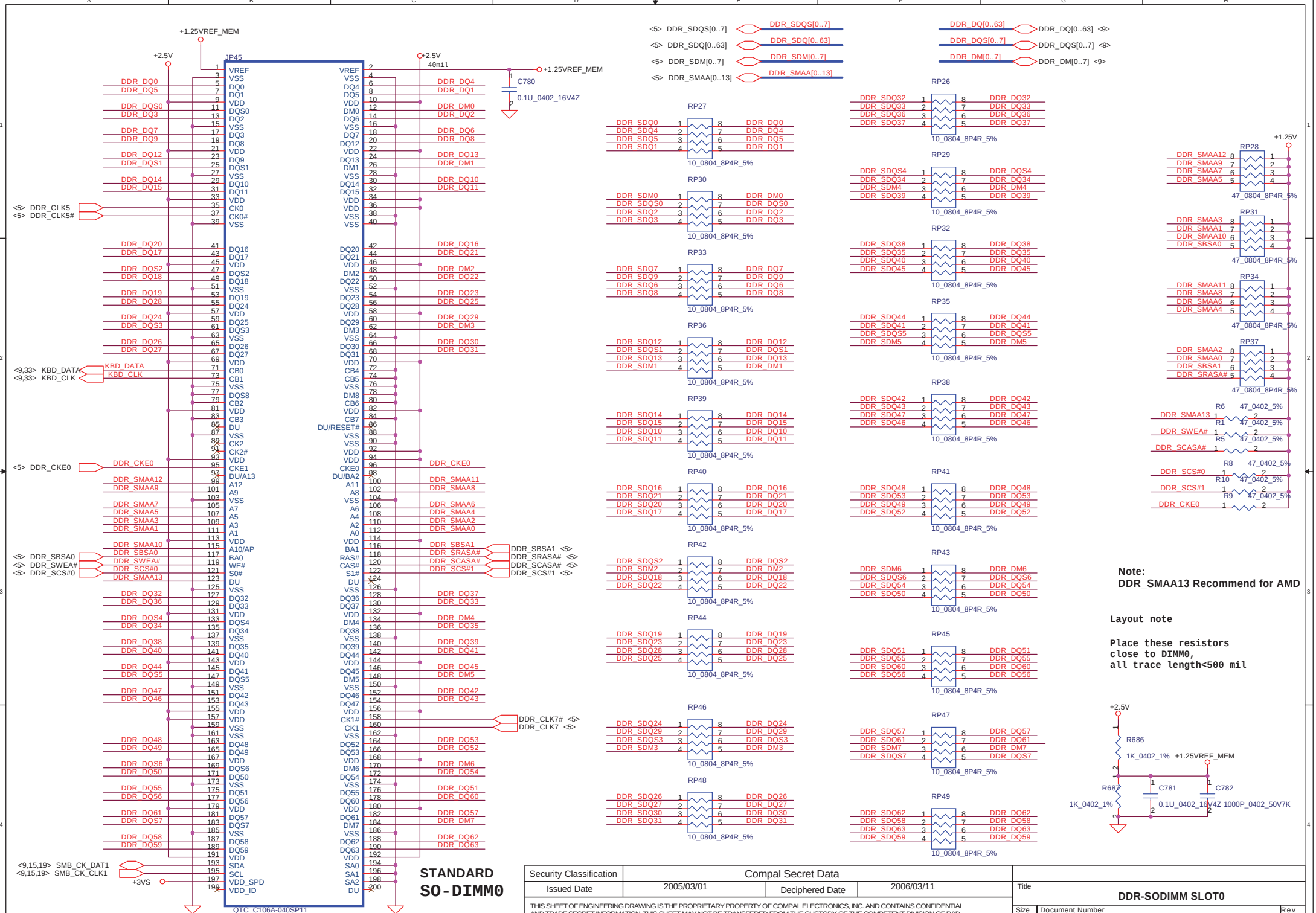

Note:
DDR_SMAA13 Recommend for AMD

Layout note

Place these resistors close to DIMM0, all trace length<500 mil

Security Classification	Compal Secret Data		
Issued Date	2005/03/01	Deciphered Date	2006/03/11

THIS SHEET OF ENGINEERING DRAWING IS THE PROPRIETARY PROPERTY OF COMPAL ELECTRONICS, INC. AND CONTAINS CONFIDENTIAL AND TRADE SECRET INFORMATION. THIS SHEET MAY NOT BE TRANSFERED FROM THE CUSTODY OF THE COMPETENT DIVISION OF R&D DEPARTMENT EXCEPT AS AUTHORIZED BY COMPAL ELECTRONICS, INC. NEITHER THIS SHEET NOR THE INFORMATION IT CONTAINS MAY BE USED BY OR DISCLOSED TO ANY THIRD PARTY WITHOUT PRIOR WRITTEN CONSENT OF COMPAL ELECTRONICS, INC.

Title: **DDR-SODIMM SLOT0**

Size: Custom | Document Number: **LA-2931** | Rev: 0.3

Date: Thursday, August 18, 2005 | Sheet 8 of 48

http://hobi-elektronika.net

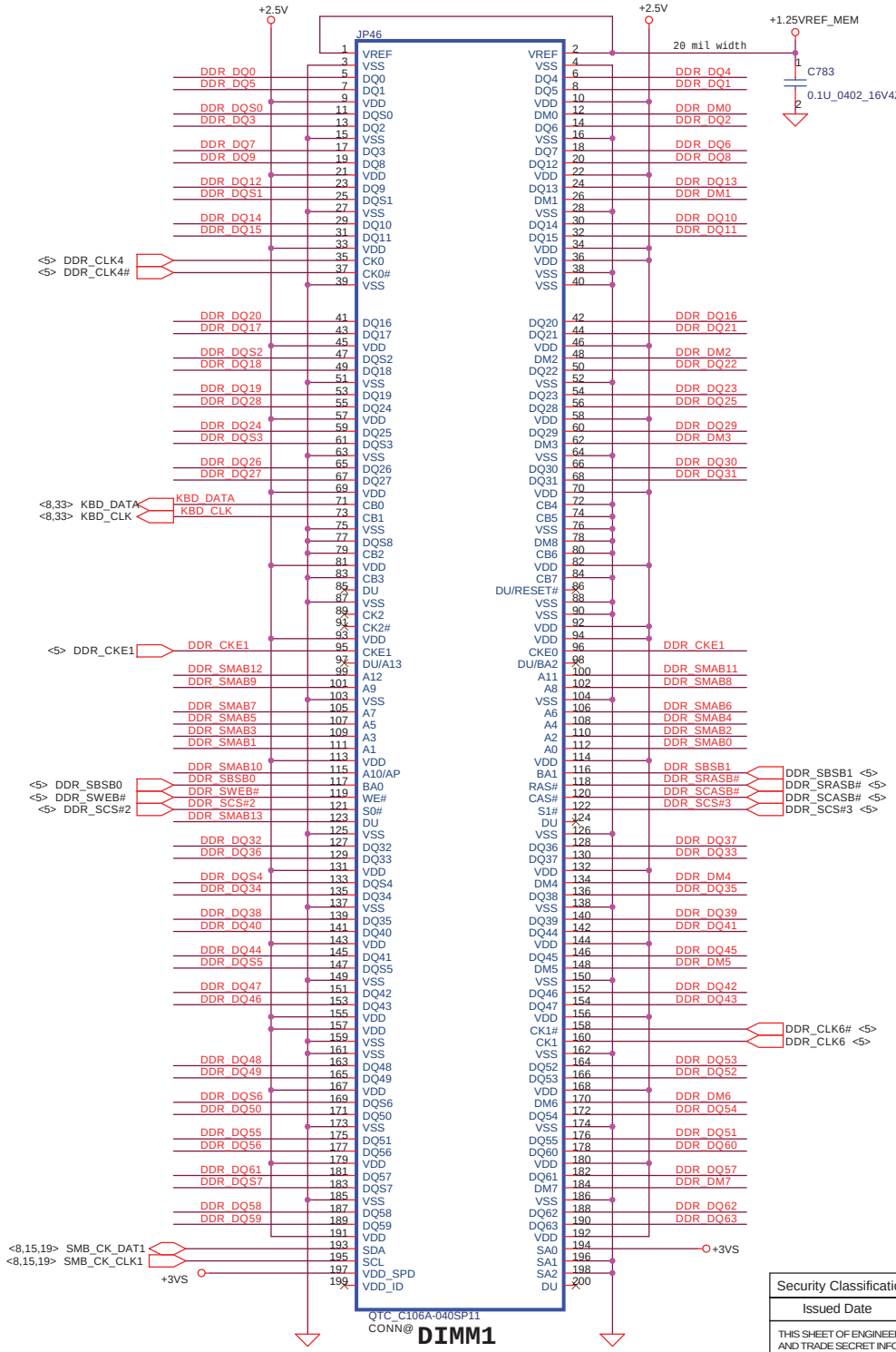

Note:
DDR_SMAB13 Recommend for AMD.

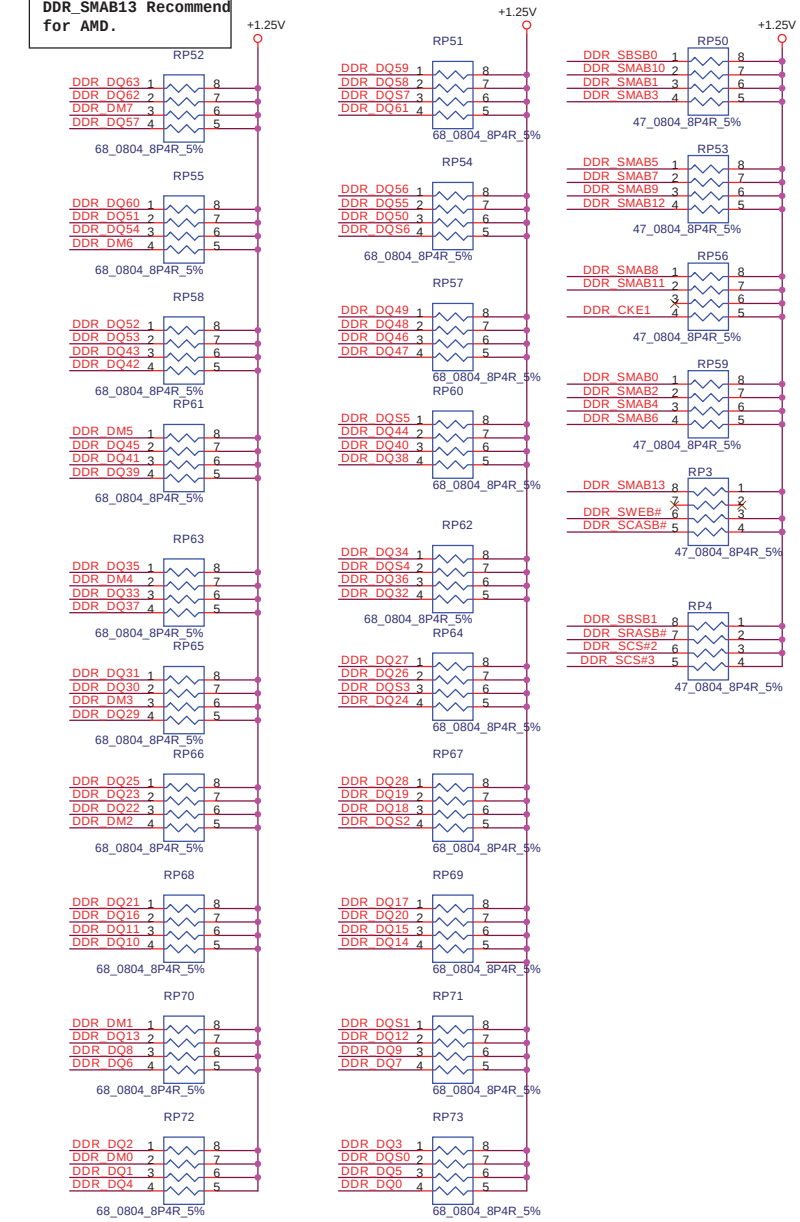

Layout note

Place these resistor closely DIMM1, all trace length<=800mil

Security Classification	Compal Secret Data		
Issued Date	2005/03/01	Deciphered Date	2006/03/11

THIS SHEET OF ENGINEERING DRAWING IS THE PROPRIETARY PROPERTY OF COMPAL ELECTRONICS, INC. AND CONTAINS CONFIDENTIAL AND TRADE SECRET INFORMATION. THIS SHEET MAY NOT BE TRANSFERED FROM THE CUSTODY OF THE COMPETENT DIVISION OF R&D DEPARTMENT EXCEPT AS AUTHORIZED BY COMPAL ELECTRONICS, INC. NEITHER THIS SHEET NOR THE INFORMATION IT CONTAINS MAY BE USED BY OR DISCLOSED TO ANY THIRD PARTY WITHOUT PRIOR WRITTEN CONSENT OF COMPAL ELECTRONICS, INC.

Title: DDR-SODIMM SLOT1

Size: Custom | Document Number: LA-2931 | Rev: 0.3

Date: Thursday, August 18, 2005 | Sheet 9 of 48

http://hobi-elektronika.net

07/07/'05

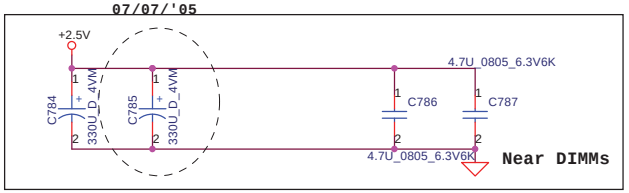

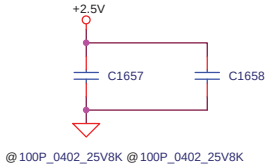

Please Close to DDR_CLK4/5 via hole

Layout note :

Place one cap close to every 2 pull up resistors termination to +1.25V

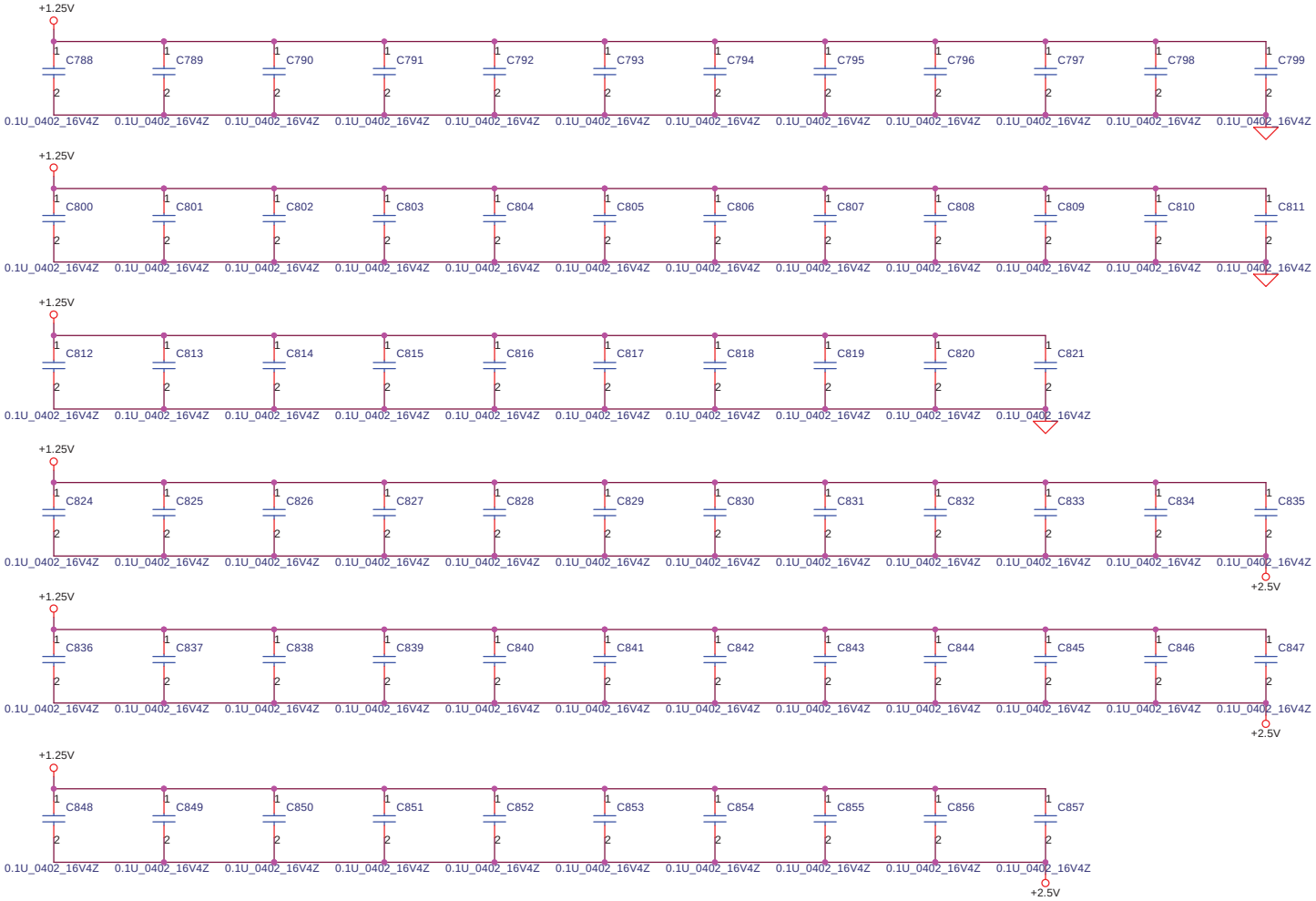

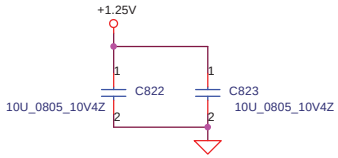

Security Classification	Compal Secret Data		
Issued Date	2005/03/01	Deciphered Date	2006/03/11

THIS SHEET OF ENGINEERING DRAWING IS THE PROPRIETARY PROPERTY OF COMPAL ELECTRONICS, INC. AND CONTAINS CONFIDENTIAL AND TRADE SECRET INFORMATION. THIS SHEET MAY NOT BE TRANSFERED FROM THE CUSTODY OF THE COMPETENT DIVISION OF R&D DEPARTMENT EXCEPT AS AUTHORIZED BY COMPAL ELECTRONICS, INC. NEITHER THIS SHEET NOR THE INFORMATION IT CONTAINS MAY BE USED BY OR DISCLOSED TO ANY THIRD PARTY WITHOUT PRIOR WRITTEN CONSENT OF COMPAL ELECTRONICS, INC.

Title: **DDR SODIMM Decoupling**

Size: Custom | Document Number: **LA-2931** | Rev: 0.3

Date: Thursday, August 18, 2005 | Sheet 10 of 48

http://hobi-elektronika.net

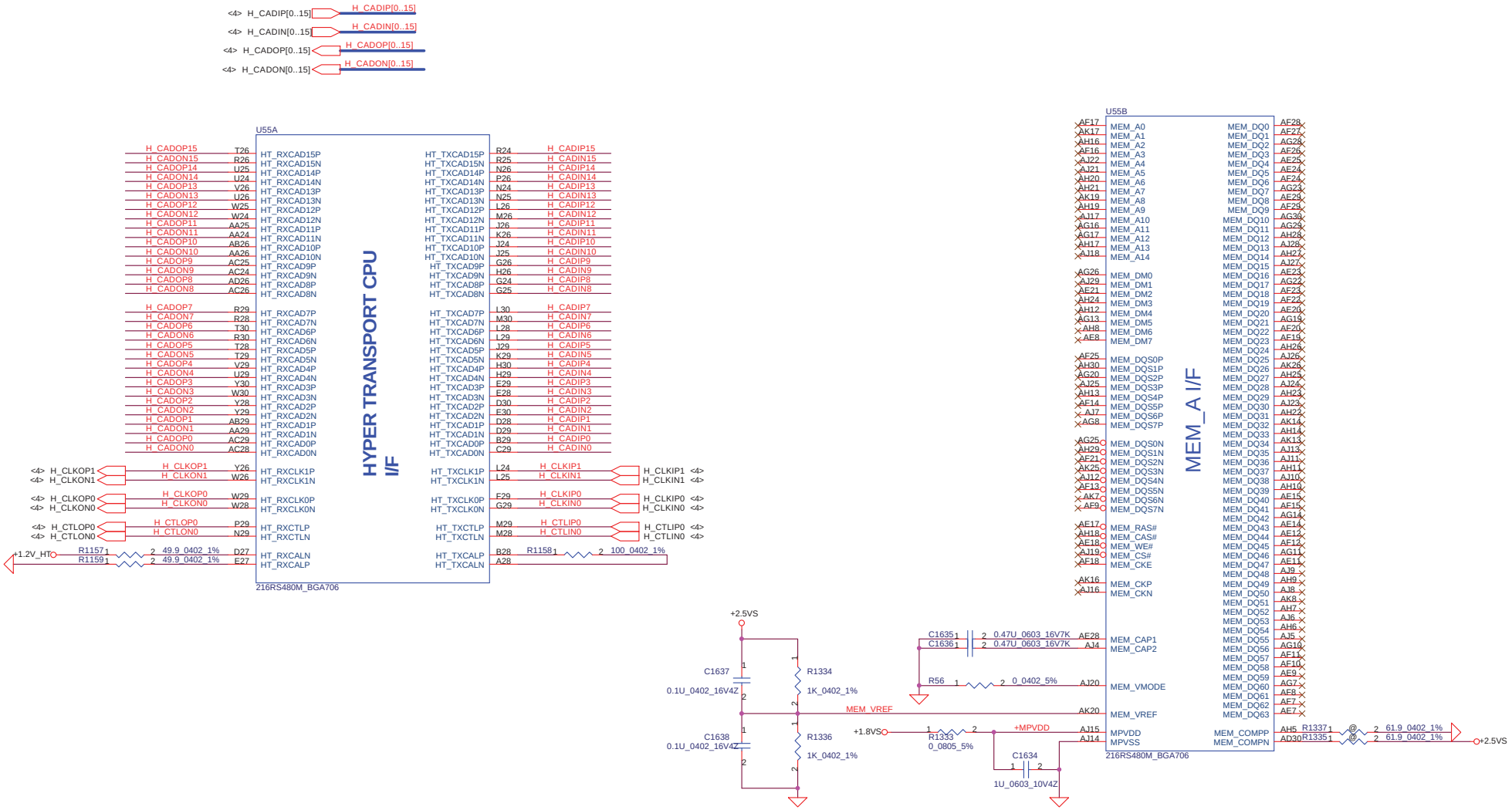

MEM_VREF , MPVDD (20mils)

Security Classification	Compal Secret Data		
Issued Date	2005/03/01	Deciphered Date	2005/04/06

THIS SHEET OF ENGINEERING DRAWING IS THE PROPRIETARY PROPERTY OF COMPAL ELECTRONICS, INC. AND CONTAINS CONFIDENTIAL AND TRADE SECRET INFORMATION. THIS SHEET MAY NOT BE TRANSFERED FROM THE CUSTODY OF THE COMPETENT DIVISION OF R&D DEPARTMENT EXCEPT AS AUTHORIZED BY COMPAL ELECTRONICS, INC. NEITHER THIS SHEET NOR THE INFORMATION IT CONTAINS MAY BE USED BY OR DISCLOSED TO ANY THIRD PARTY WITHOUT PRIOR WRITTEN CONSENT OF COMPAL ELECTRONICS, INC.

Title: RS480M-HT/VMEM

Size: Custom | Document Number: LA-2931 | Rev: 0.3

Date: Thursday, August 18, 2005 | Sheet 11 of 48

http://hobi-elektronika.net

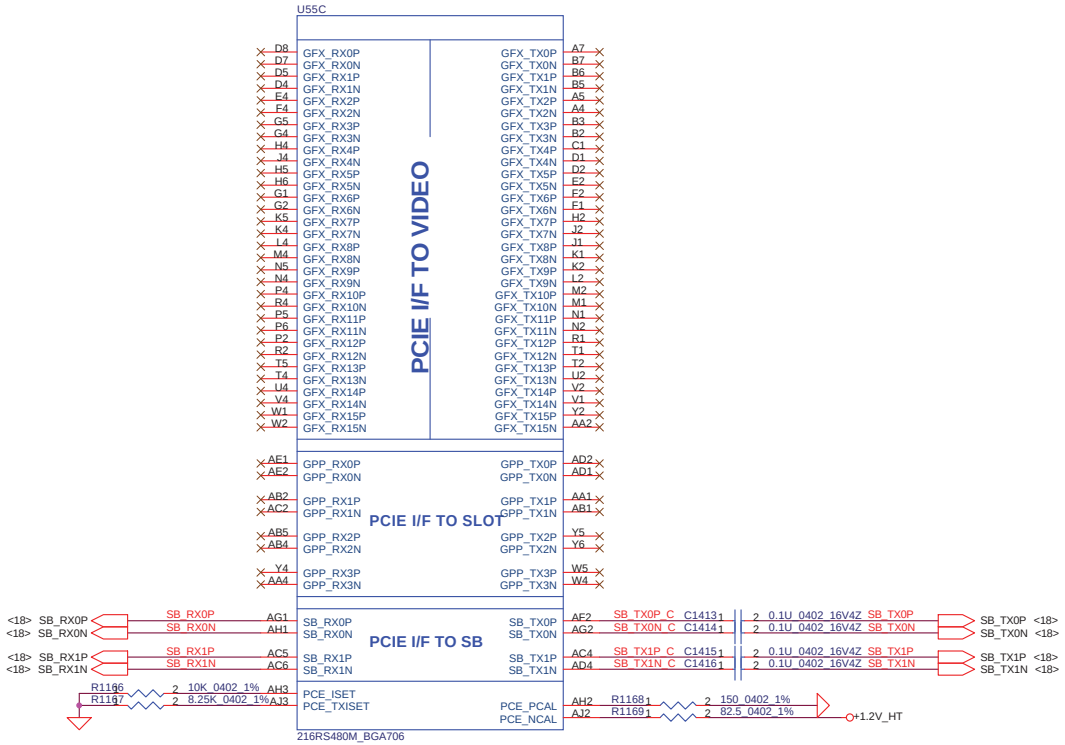

Security Classification	Compal Secret Data		
Issued Date	2005/03/01	Deciphered Date	2005/04/06

THIS SHEET OF ENGINEERING DRAWING IS THE PROPRIETARY PROPERTY OF COMPAL ELECTRONICS, INC. AND CONTAINS CONFIDENTIAL AND TRADE SECRET INFORMATION. THIS SHEET MAY NOT BE TRANSFERED FROM THE CUSTODY OF THE COMPETENT DIVISION OF R&D DEPARTMENT EXCEPT AS AUTHORIZED BY COMPAL ELECTRONICS, INC. NEITHER THIS SHEET NOR THE INFORMATION IT CONTAINS MAY BE USED BY OR DISCLOSED TO ANY THIRD PARTY WITHOUT PRIOR WRITTEN CONSENT OF COMPAL ELECTRONICS, INC.

Title: **RS480M PCIE/DVI Controller**

Size: Custom | Document Number: **LA-2931** | Rev: 0.3

Date: Thursday, August 18, 2005 | Sheet 12 of 48

http://hobi-elektronika.net

AVDD , AVDDI , AVDDQ , +NB_PLLVDD , +NB_HTPVDD
+NB_VDDR3 , LPVDD , LVDDR18D , LVDDR18A (20mils)

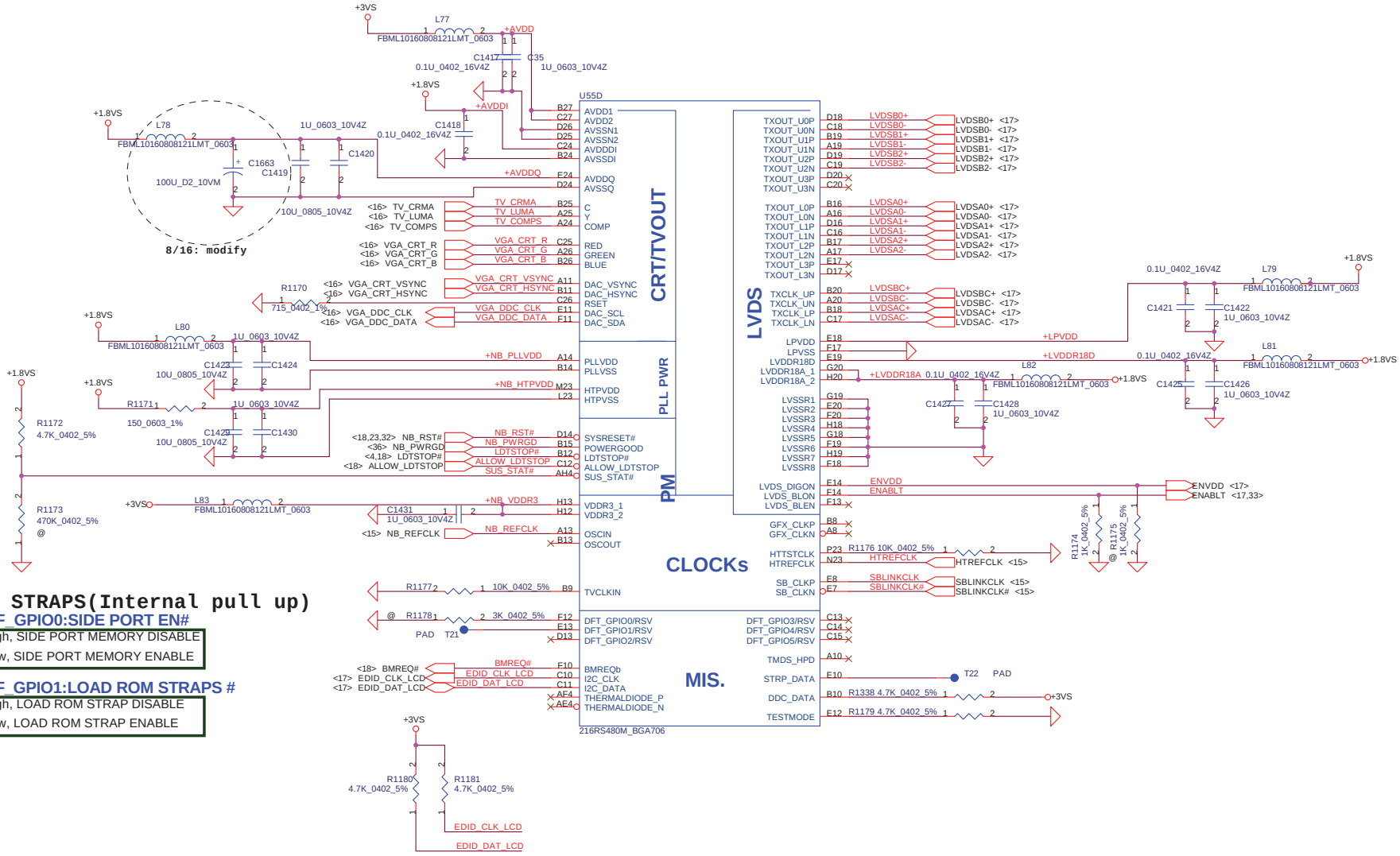

NB STRAPS(Internal pull up)

DEF_GPIO0:SIDE PORT EN#

High, SIDE PORT MEMORY DISABLE
Low, SIDE PORT MEMORY ENABLE

DEF_GPIO1:LOAD ROM STRAPS #

High, LOAD ROM STRAP DISABLE
Low, LOAD ROM STRAP ENABLE

Security Classification	Compal Secret Data		
Issued Date	2005/03/01	Deciphered Date	2005/04/06

THIS SHEET OF ENGINEERING DRAWING IS THE PROPRIETARY PROPERTY OF COMPAL ELECTRONICS, INC. AND CONTAINS CONFIDENTIAL AND TRADE SECRET INFORMATION. THIS SHEET MAY NOT BE TRANSFERED FROM THE CUSTODY OF THE COMPETENT DIVISION OF R&D DEPARTMENT EXCEPT AS AUTHORIZED BY COMPAL ELECTRONICS, INC. NEITHER THIS SHEET NOR THE INFORMATION IT CONTAINS MAY BE USED BY OR DISCLOSED TO ANY THIRD PARTY WITHOUT PRIOR WRITTEN CONSENT OF COMPAL ELECTRONICS, INC.

Title: **RS480M VIDEO_IF/CLOCK GEN**

Size: Custom | Document Number: **LA-2931** | Rev: 0.3

Date: Thursday, August 18, 2005 | Sheet 13 of 48

http://hobi-elektronika.net

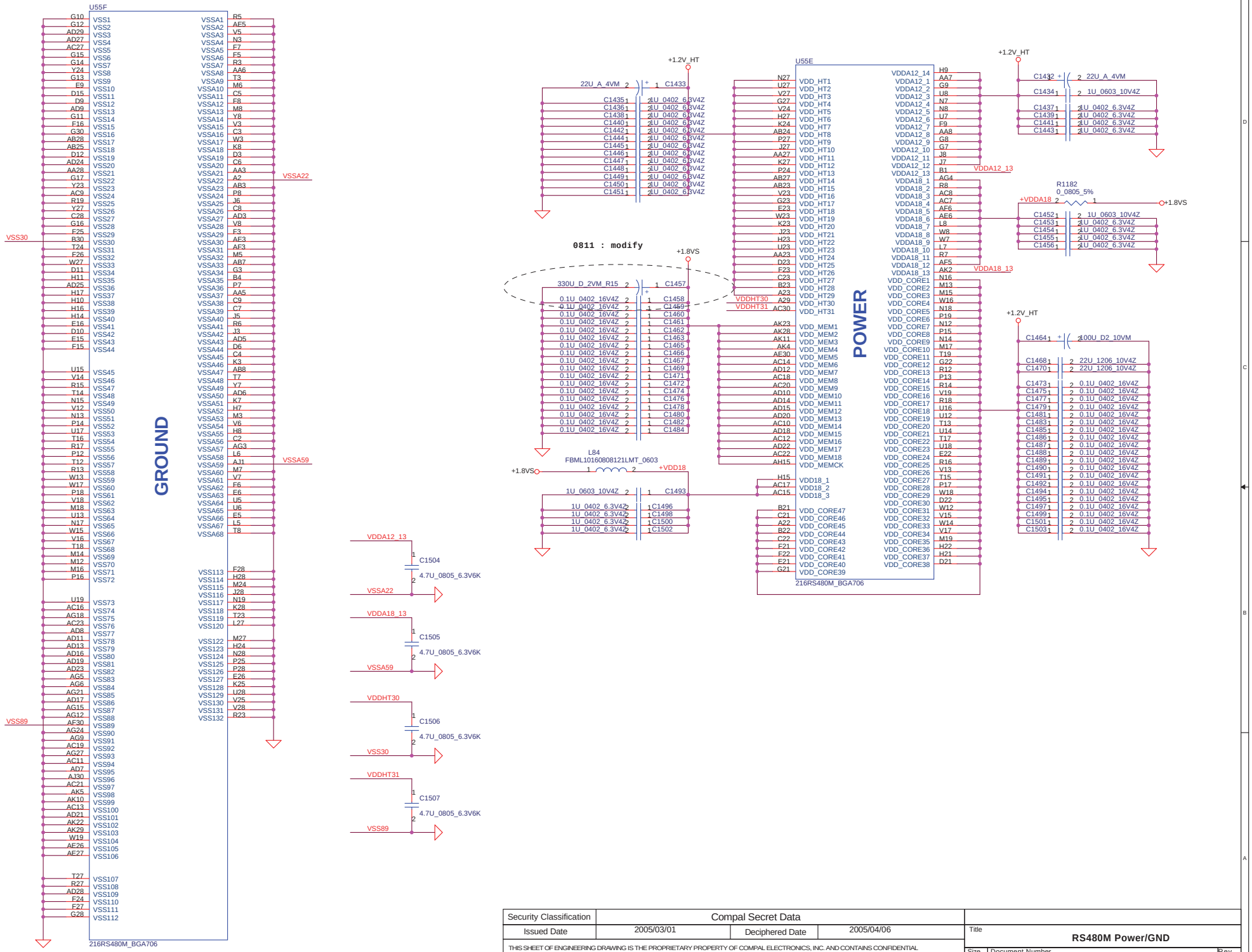

Security Classification	Compal Secret Data		
Issued Date	2005/03/01	Deciphered Date	2005/04/06

THIS SHEET OF ENGINEERING DRAWING IS THE PROPRIETARY PROPERTY OF COMPAL ELECTRONICS, INC. AND CONTAINS CONFIDENTIAL AND TRADE SECRET INFORMATION. THIS SHEET MAY NOT BE TRANSFERED FROM THE CUSTODY OF THE COMPETENT DIVISION OF R&D DEPARTMENT EXCEPT AS AUTHORIZED BY COMPAL ELECTRONICS, INC. NEITHER THIS SHEET NOR THE INFORMATION IT CONTAINS MAY BE USED BY OR DISCLOSED TO ANY THIRD PARTY WITHOUT PRIOR WRITTEN CONSENT OF COMPAL ELECTRONICS, INC.

Title: **RS480M Power/GND**

Size: Custom | Document Number: **LA-2931** | Rev: 0.3

Date: Thursday, August 18, 2005 | Sheet 14 of 48

http://hobi-elektronika.net

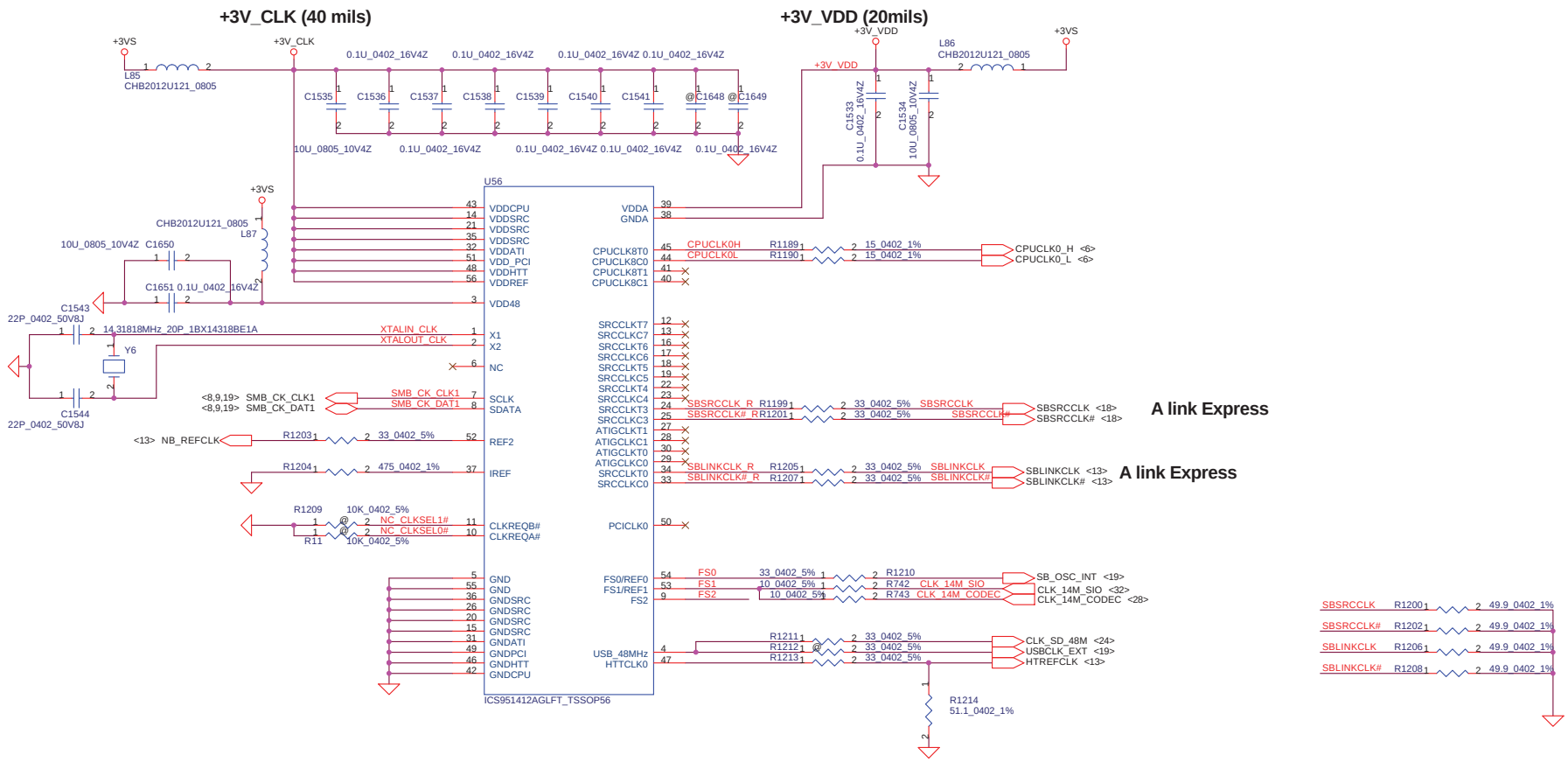

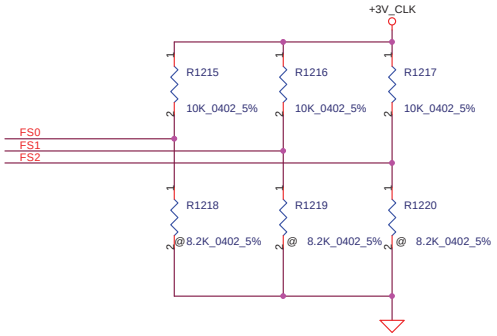

EXT CLK FREQUENCY SELECT TABLE(MHZ)

FS2	FS1	FS0	CPU	SRCCLK [2:1]	HTT	PCI	USB	COMMENT
0	0	0	Hi-Z	100.00	Hi-Z	Hi-Z	48.00	Reserved
0	0	1	X	100.00	X/3	X/6	48.00	Reserved
0	1	0	180.00	100.00	60.00	30.00	48.00	Reserved
0	1	1	220.00	100.00	36.56	73.12	48.00	Reserved
1	0	0	100.00	100.00	66.66	33.33	48.00	Reserved
1	0	1	133.33	100.00	66.66	33.33	48.00	Reserved
* 1	1	1	200.00	100.00	66.66	33.33	48.00	Normal HAMMER operation

Security Classification	Compal Secret Data		
Issued Date	2005/03/01	Deciphered Date	2005/04/06

THIS SHEET OF ENGINEERING DRAWING IS THE PROPRIETARY PROPERTY OF COMPAL ELECTRONICS, INC. AND CONTAINS CONFIDENTIAL AND TRADE SECRET INFORMATION. THIS SHEET MAY NOT BE TRANSFERED FROM THE CUSTODY OF THE COMPETENT DIVISION OF R&D DEPARTMENT EXCEPT AS AUTHORIZED BY COMPAL ELECTRONICS, INC. NEITHER THIS SHEET NOR THE INFORMATION IT CONTAINS MAY BE USED BY OR DISCLOSED TO ANY THIRD PARTY WITHOUT PRIOR WRITTEN CONSENT OF COMPAL ELECTRONICS, INC.

Title: **Clock Generator**

Size: Custom | Document Number: **LA-2931** | Rev: 0.3

Date: Thursday, August 18, 2005 | Sheet 15 of 48

http://hobi-elektronika.net

CRT/TV-OUT Connector

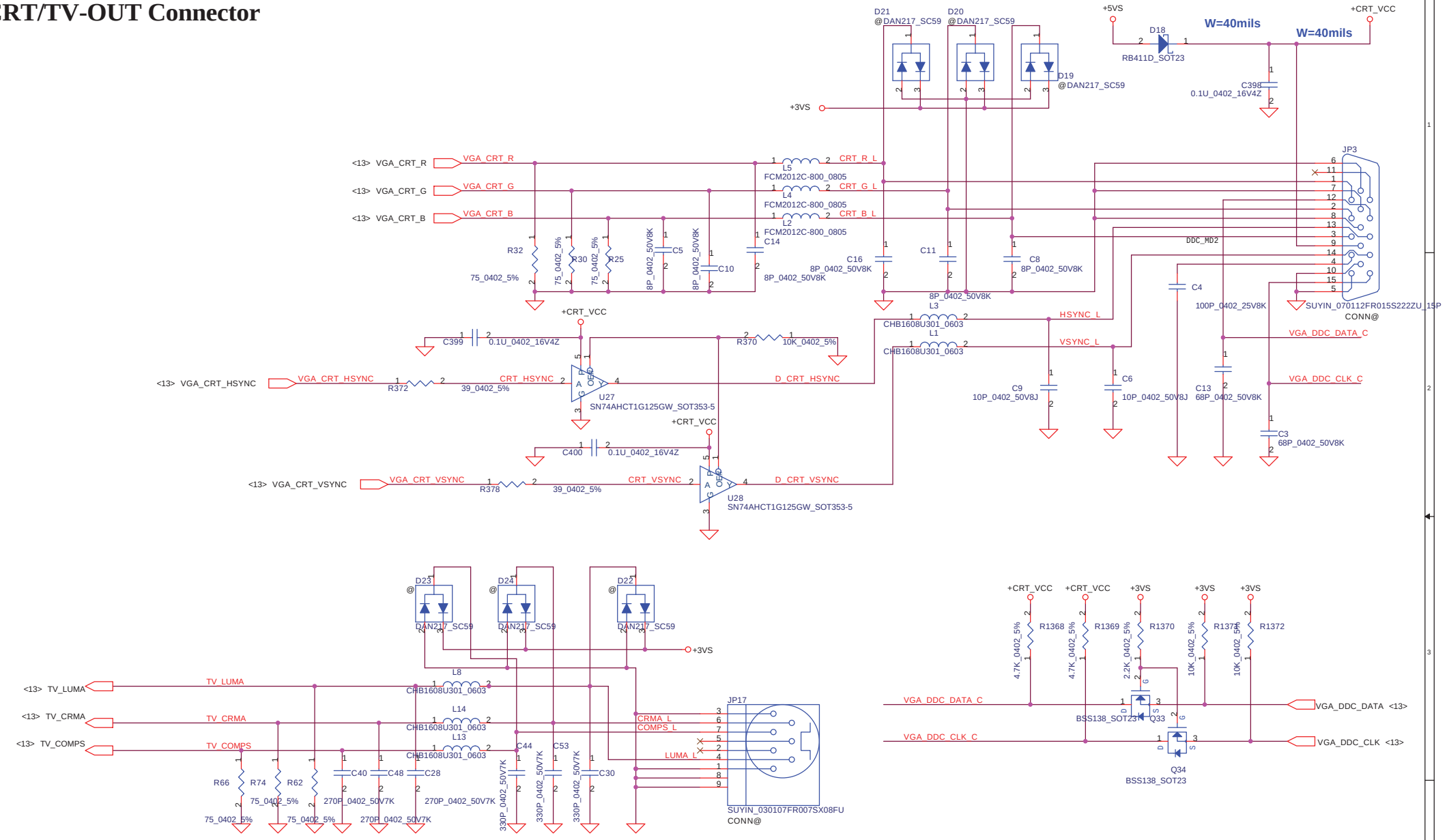

Security Classification	Compal Secret Data		
Issued Date	2005/03/01	Deciphered Date	2005/04/06

THIS SHEET OF ENGINEERING DRAWING IS THE PROPRIETARY PROPERTY OF COMPAL ELECTRONICS, INC. AND CONTAINS CONFIDENTIAL AND TRADE SECRET INFORMATION. THIS SHEET MAY NOT BE TRANSFERED FROM THE CUSTODY OF THE COMPETENT DIVISION OF R&D DEPARTMENT EXCEPT AS AUTHORIZED BY COMPAL ELECTRONICS, INC. NEITHER THIS SHEET NOR THE INFORMATION IT CONTAINS MAY BE USED BY OR DISCLOSED TO ANY THIRD PARTY WITHOUT PRIOR WRITTEN CONSENT OF COMPAL ELECTRONICS, INC.

Title	TV_OUT/CRT CONN	
Size Custom	Document Number LA-2931	Rev 0.3
Date: Thursday, August 18, 2005	Sheet 16 of 48	

http://hobi-elektronika.net

LCD POWER CIRCUIT

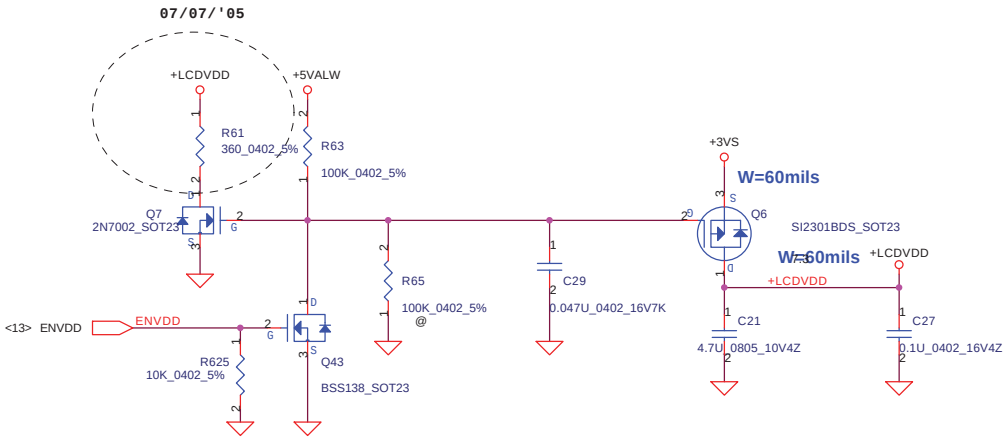

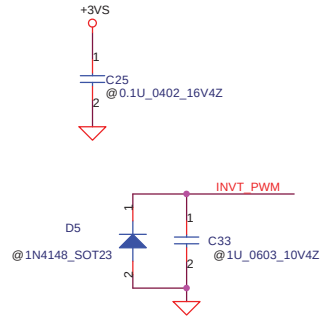

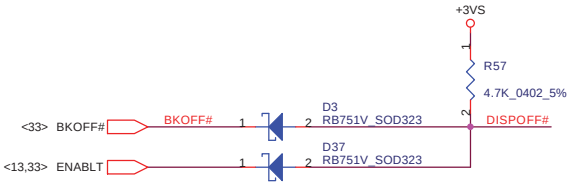

LCD/PANEL BD. Conn.

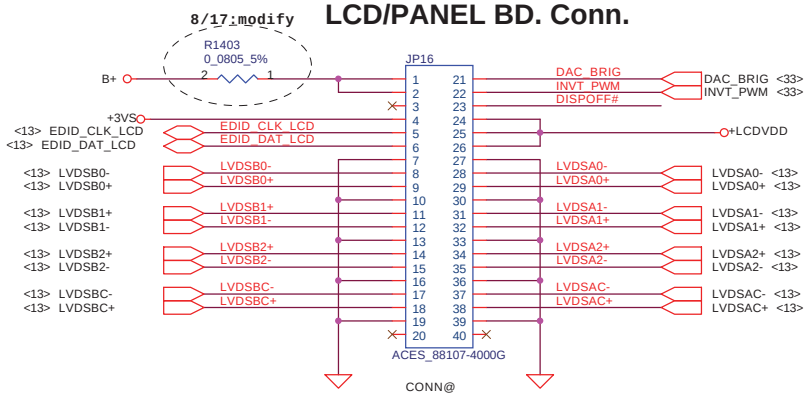

Security Classification	Compal Secret Data		
Issued Date	2005/03/01	Deciphered Date	2005/04/06

THIS SHEET OF ENGINEERING DRAWING IS THE PROPRIETARY PROPERTY OF COMPAL ELECTRONICS, INC. AND CONTAINS CONFIDENTIAL AND TRADE SECRET INFORMATION. THIS SHEET MAY NOT BE TRANSFERED FROM THE CUSTODY OF THE COMPETENT DIVISION OF R&D DEPARTMENT EXCEPT AS AUTHORIZED BY COMPAL ELECTRONICS, INC. NEITHER THIS SHEET NOR THE INFORMATION IT CONTAINS MAY BE USED BY OR DISCLOSED TO ANY THIRD PARTY WITHOUT PRIOR WRITTEN CONSENT OF COMPAL ELECTRONICS, INC.

Title: **LCD Conn**

Size: Custom | Document Number: **LA-2931** | Rev: 0.3

Date: Thursday, August 18, 2005 | Sheet 17 of 48

http://hobi-elektronika.net

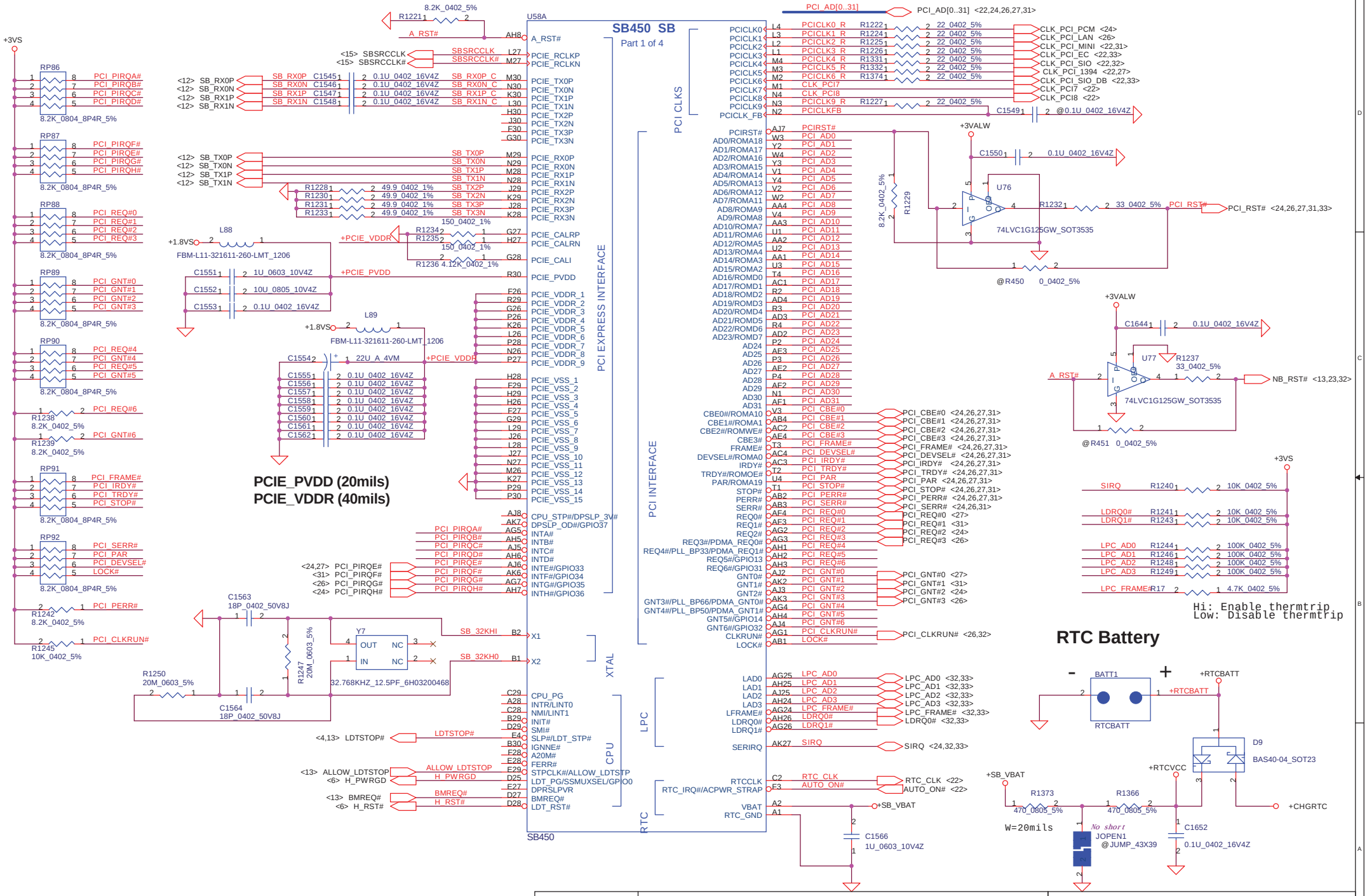

Security Classification	Compal Secret Data		
Issued Date	2005/03/01	Deciphered Date	2005/04/06

THIS SHEET OF ENGINEERING DRAWING IS THE PROPRIETARY PROPERTY OF COMPAL ELECTRONICS, INC. AND CONTAINS CONFIDENTIAL AND TRADE SECRET INFORMATION. THIS SHEET MAY NOT BE TRANSFERED FROM THE CUSTODY OF THE COMPETENT DIVISION OF R&D DEPARTMENT EXCEPT AS AUTHORIZED BY COMPAL ELECTRONICS, INC. NEITHER THIS SHEET NOR THE INFORMATION IT CONTAINS MAY BE USED BY OR DISCLOSED TO ANY THIRD PARTY WITHOUT PRIOR WRITTEN CONSENT OF COMPAL ELECTRONICS, INC.

Title: SB400-PCI_EXP/PCI/LPC/RTC

Size: Custom | Document Number: LA-2931 | Rev: 0.3

Date: Thursday, August 18, 2005 | Sheet 18 of 48

http://hobi-elektronika.net

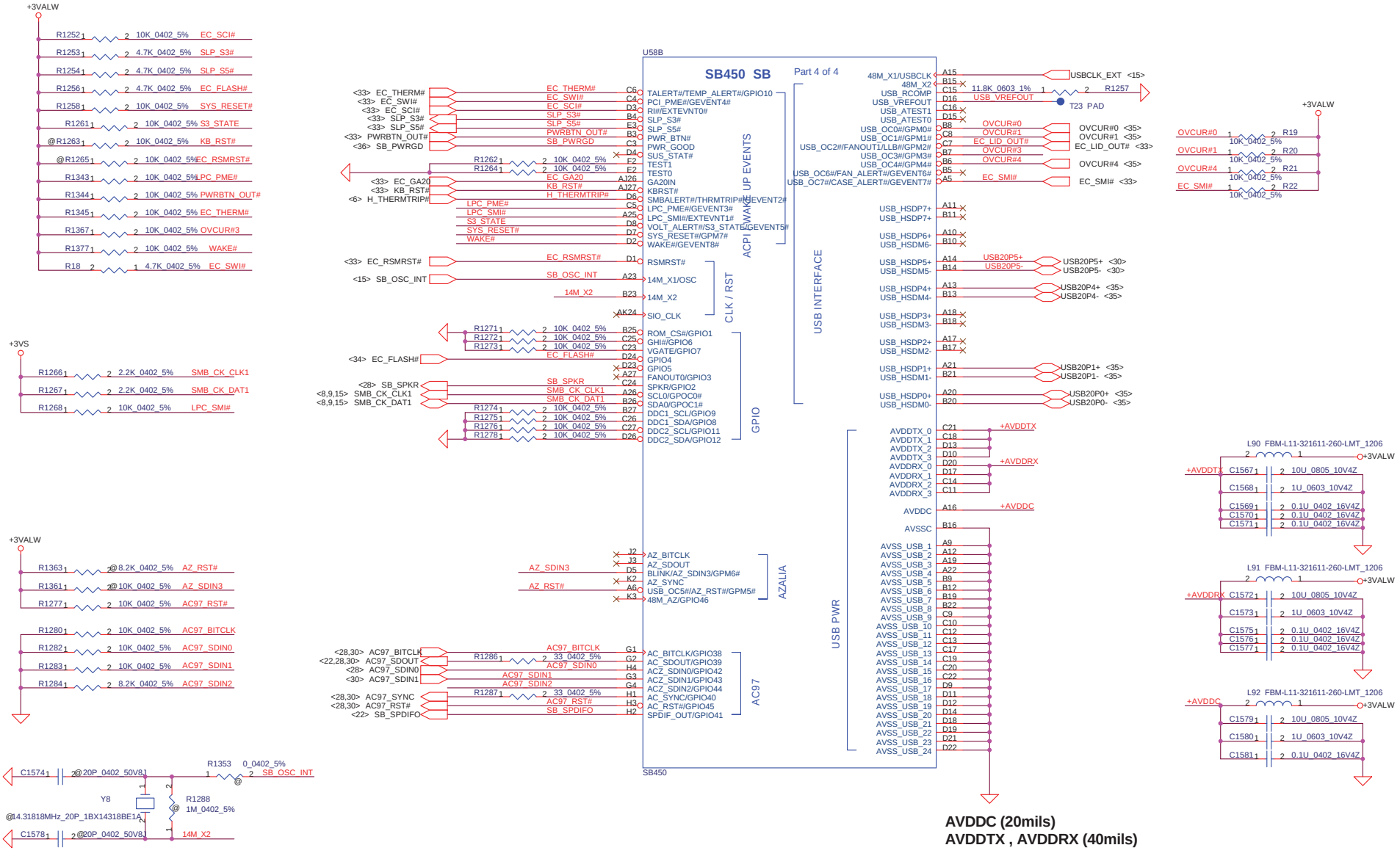

	GPIO12	GPIO11
HYNIX 128MB	0	1
SAMSUMG 128MB	1	1
* No VRAM	0	0
Reserved	1	0

Security Classification	Compal Secret Data		
Issued Date	2005/03/01	Deciphered Date	2005/04/06

THIS SHEET OF ENGINEERING DRAWING IS THE PROPRIETARY PROPERTY OF COMPAL ELECTRONICS, INC. AND CONTAINS CONFIDENTIAL AND TRADE SECRET INFORMATION. THIS SHEET MAY NOT BE TRANSFERED FROM THE CUSTODY OF THE COMPETENT DIVISION OF R&D DEPARTMENT EXCEPT AS AUTHORIZED BY COMPAL ELECTRONICS, INC. NEITHER THIS SHEET NOR THE INFORMATION IT CONTAINS MAY BE USED BY OR DISCLOSED TO ANY THIRD PARTY WITHOUT PRIOR WRITTEN CONSENT OF COMPAL ELECTRONICS, INC.

Title: SB400-USB/ACPI/AC97/GPIO

Size: Custom | Document Number: LA-2931 | Rev: 0.3

Date: Thursday, August 18, 2005 | Sheet 19 of 48

http://hobi-elektronika.net

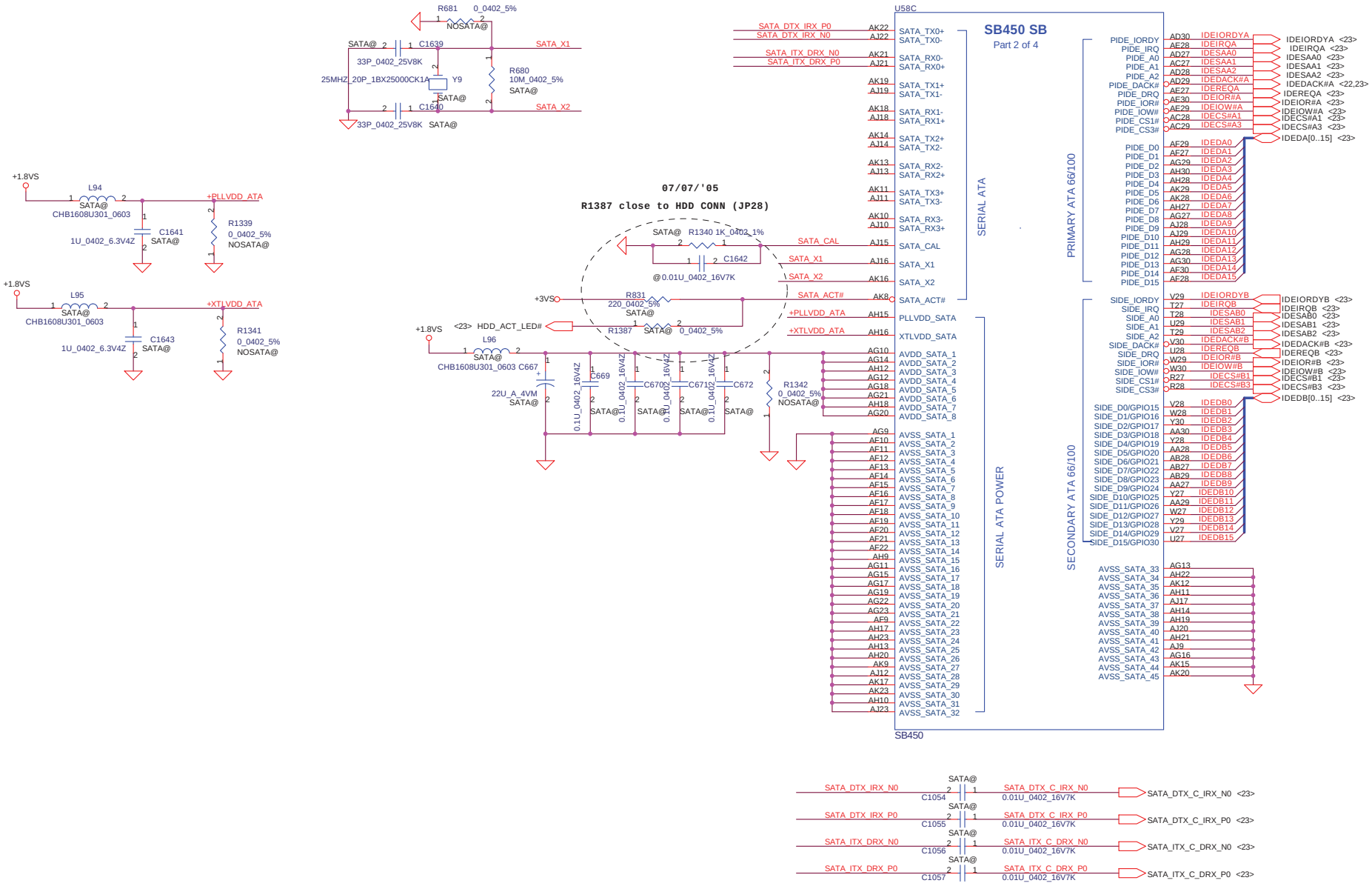

Security Classification	Compal Secret Data		
Issued Date	2005/03/01	Deciphered Date	2005/04/06

THIS SHEET OF ENGINEERING DRAWING IS THE PROPRIETARY PROPERTY OF COMPAL ELECTRONICS, INC. AND CONTAINS CONFIDENTIAL AND TRADE SECRET INFORMATION. THIS SHEET MAY NOT BE TRANSFERRED FROM THE CUSTODY OF THE COMPETENT DIVISION OF R&D DEPARTMENT EXCEPT AS AUTHORIZED BY COMPAL ELECTRONICS, INC. NEITHER THIS SHEET NOR THE INFORMATION IT CONTAINS MAY BE USED BY OR DISCLOSED TO ANY THIRD PARTY WITHOUT PRIOR WRITTEN CONSENT OF COMPAL ELECTRONICS, INC.

Title: **SB400-IDE/SATA**

Size: Custom | Document Number: **LA-2931** | Rev: 0.3

Date: Thursday, August 18, 2005 | Sheet 20 of 48

http://hobi-elektronika.net

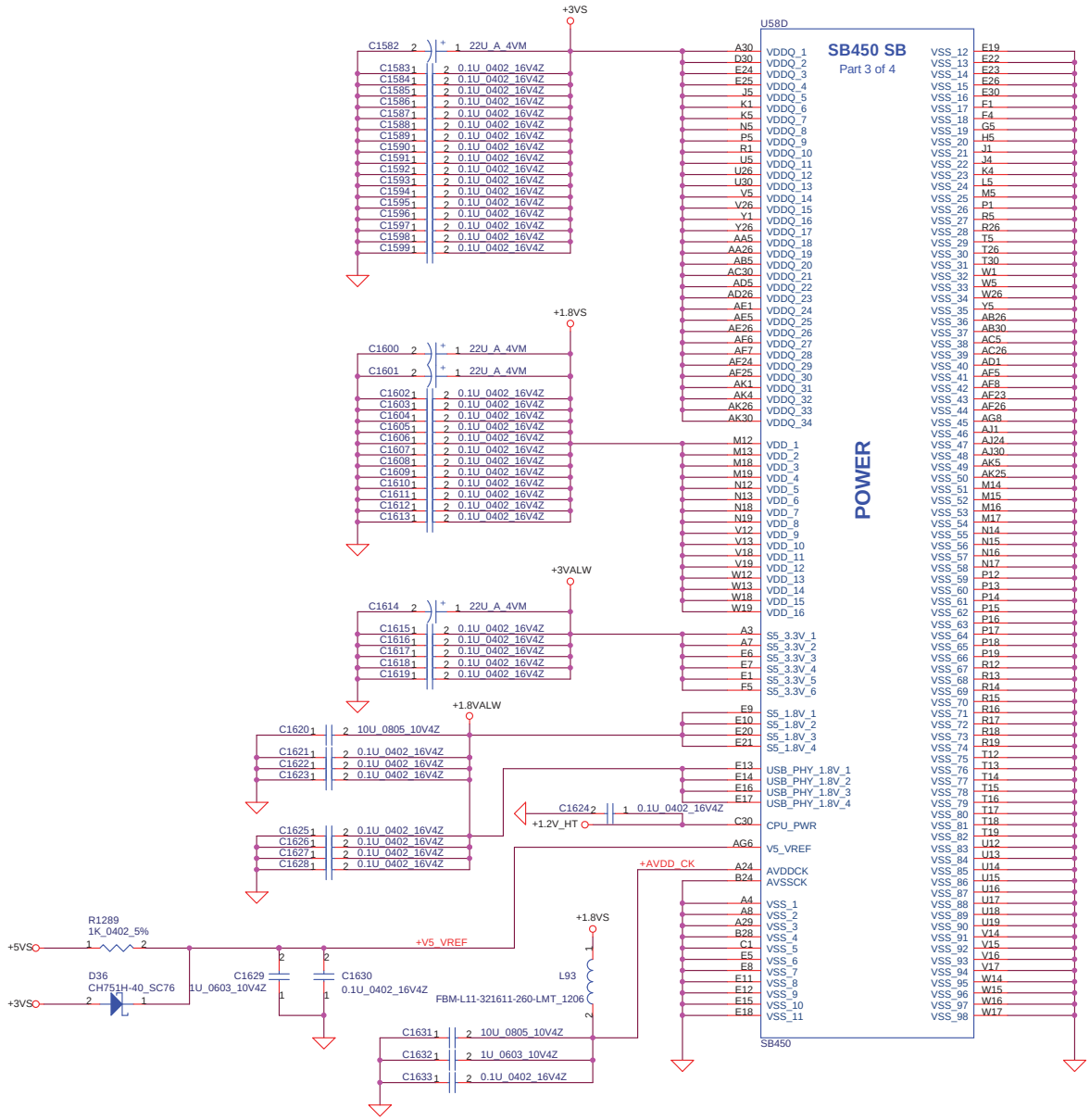

V5_VREF (20mils)
AVDD_CK(40mils)

Security Classification	Compal Secret Data		
Issued Date	2005/03/01	Deciphered Date	2005/04/06

THIS SHEET OF ENGINEERING DRAWING IS THE PROPRIETARY PROPERTY OF COMPAL ELECTRONICS, INC. AND CONTAINS CONFIDENTIAL AND TRADE SECRET INFORMATION. THIS SHEET MAY NOT BE TRANSFERED FROM THE CUSTODY OF THE COMPETENT DIVISION OF R&D DEPARTMENT EXCEPT AS AUTHORIZED BY COMPAL ELECTRONICS, INC. NEITHER THIS SHEET NOR THE INFORMATION IT CONTAINS MAY BE USED BY OR DISCLOSED TO ANY THIRD PARTY WITHOUT PRIOR WRITTEN CONSENT OF COMPAL ELECTRONICS, INC.

Title: **SB400-Power/GND**

Size: Custom | Document Number: **LA-2931** | Rev: 0.3

Date: Thursday, August 18, 2005 | Sheet 21 of 48

http://hobi-elektronika.net

REQUIRED STRAPS

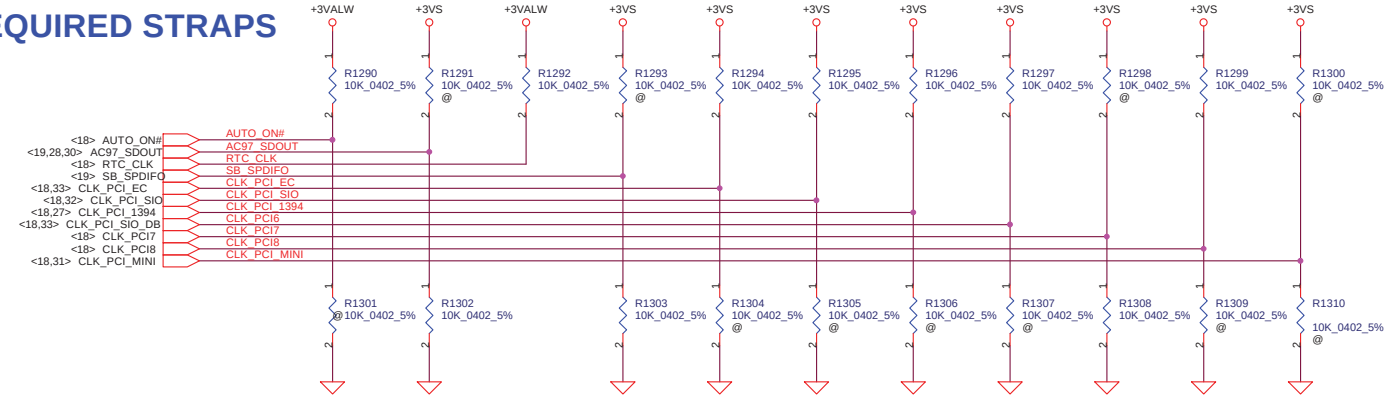

ACPWRON

	AUTO_ON#	AC97_SDOUT	RTC_CLK	SB_SPDIFO	CLK_PCI_MINI	CLK_PCI_EC	CLK_PCI_SIO	CLK_PCI_1394	PCI_CLK2 PCI_CLK3 PCI_CLK4 PCI_CLK5 CLK_PCI6	CLK_PCI7 PCI_CLK8
PULL HIGH	MANUAL PWR ON DEFAULT	USE DEBUG STRAPS	INTERNAL RTC DEFAULT	SIO 24MHz	48MHz OSC MODE	USB PHY PWRDOWN DISABLE DEFAULT	INTERNAL 48MHz DEFAULT	PCIE_CM_SET LOW DEFAULT	CPU I/F = K8 DEFAULT	ROM TYPE H,H = PCI ROM H,L = PMC LPC ROM L,H = NORMAL LPC ROM DEFAULT L,L = FWH ROM
PULL LOW	AUTO PWR ON	IGNORE DEBUG STRAPS DEFAULT	EXTERNAL RTC (NOT SUPPORTED W/ IT8712)	SIO 48MHz DEFAULT	48MHz XTAL MODE	USB PHY PWRDOWN ENABLE	EXTERNAL 48MHz	PCIE_CM_SET High	CPU I/F = P4	

DEBUG STRAPS

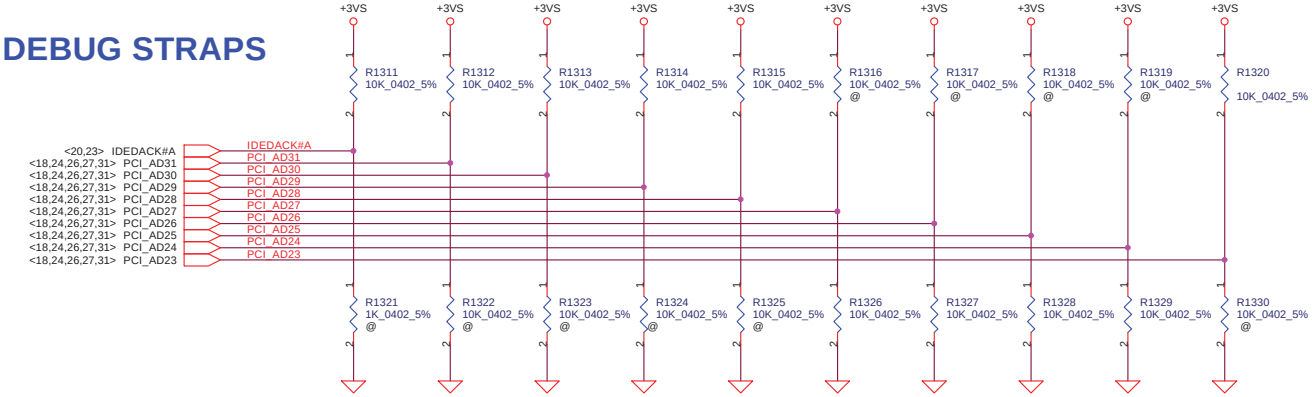

	PD_DACK#	PCI_AD31	PCI_AD30	PCI_AD29	PCI_AD28	PCI_AD27	PCI_AD26	PCI_AD25	PCI_AD24	PCI_AD23
PULL HIGH	USE LONG RESET DEFAULT	RESERVED	RESERVED	RESERVED	RESERVED	BYPASS PCI PLL	BYPASS ACPI BCLK	BYPASS IDE PLL	USE EEPROM PCIE STRAPS	RESERVED
PULL LOW	USE SHORT RESET					USE PCI PLL DEFAULT	USE ACPI BCLK DEFAULT	USE IDE PLL DEFAULT	USE DEFAULT PCIE STRAPS DEFAULT	

Security Classification	Compal Secret Data		
Issued Date	2005/03/01	Deciphered Date	2005/04/06

THIS SHEET OF ENGINEERING DRAWING IS THE PROPRIETARY PROPERTY OF COMPAL ELECTRONICS, INC. AND CONTAINS CONFIDENTIAL AND TRADE SECRET INFORMATION. THIS SHEET MAY NOT BE TRANSFERRED FROM THE CUSTODY OF THE COMPETENT DIVISION OF R&D DEPARTMENT EXCEPT AS AUTHORIZED BY COMPAL ELECTRONICS, INC. NEITHER THIS SHEET NOR THE INFORMATION IT CONTAINS MAY BE USED BY OR DISCLOSED TO ANY THIRD PARTY WITHOUT PRIOR WRITTEN CONSENT OF COMPAL ELECTRONICS, INC.

Title: Hardware Trap

Size: Custom | Document Number: LA-2931 | Rev: 0.3

Date: Thursday, August 18, 2005 | Sheet 22 of 48

http://hobi-elektronika.net

HDD CONN

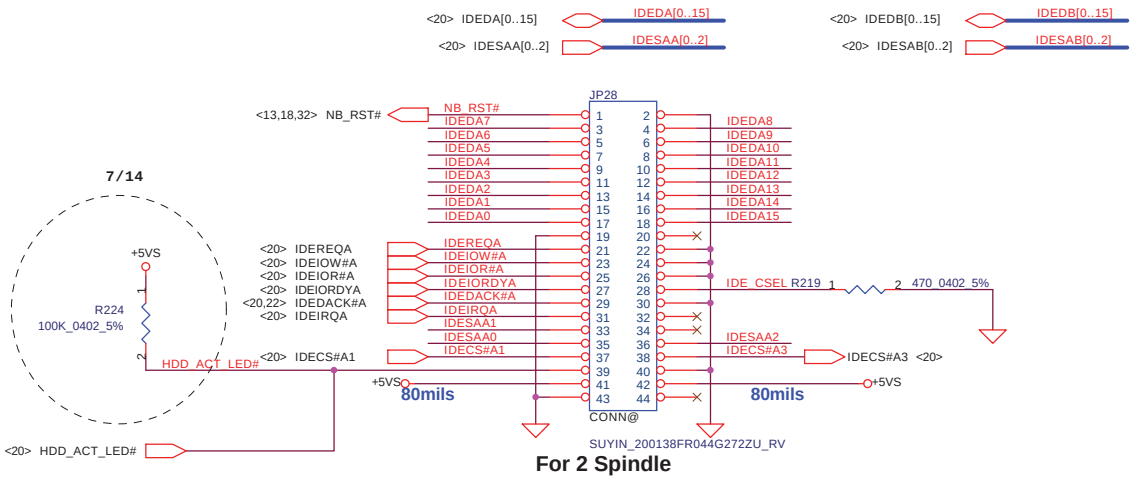

For 2 Spindle

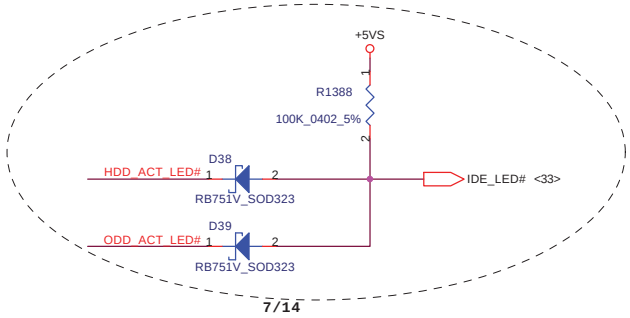

CDROM CONN

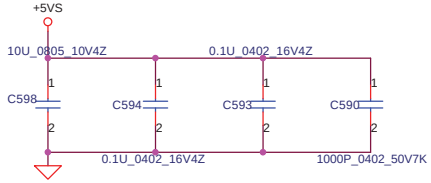

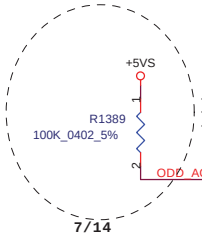

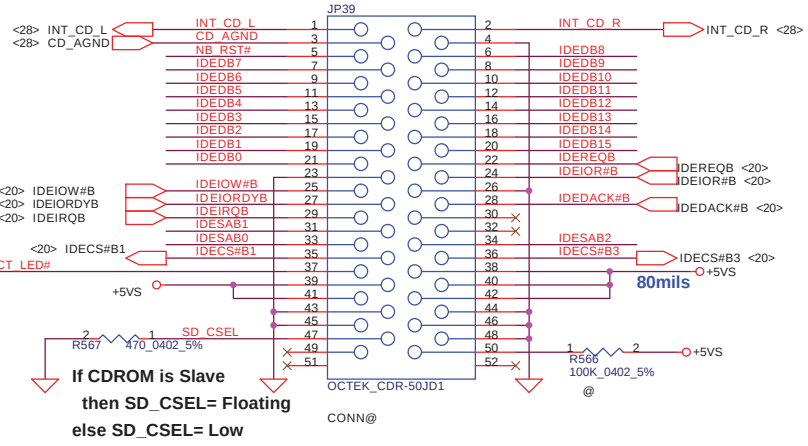

If CDROM is Slave
then SD_CSEL= Floating
else SD_CSEL= Low

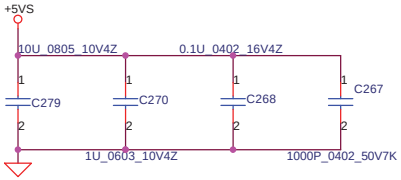

SATA HDD CONN

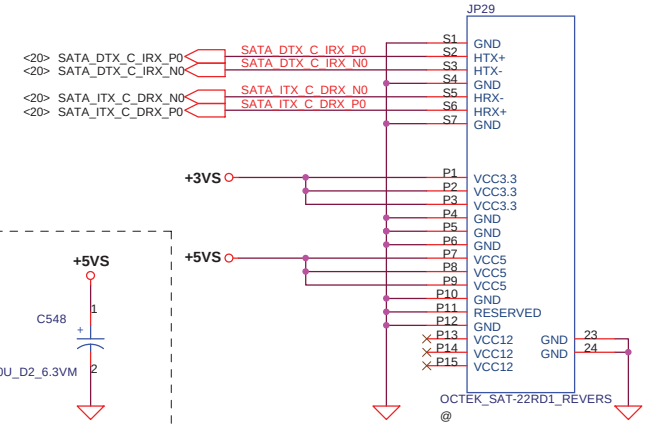

For 2 Spindle

Security Classification	Compal Secret Data		
Issued Date	2005/03/01	Deciphered Date	2005/04/06

THIS SHEET OF ENGINEERING DRAWING IS THE PROPRIETARY PROPERTY OF COMPAL ELECTRONICS, INC. AND CONTAINS CONFIDENTIAL AND TRADE SECRET INFORMATION. THIS SHEET MAY NOT BE TRANSFERED FROM THE CUSTODY OF THE COMPETENT DIVISION OF R&D DEPARTMENT EXCEPT AS AUTHORIZED BY COMPAL ELECTRONICS, INC. NEITHER THIS SHEET NOR THE INFORMATION IT CONTAINS MAY BE USED BY OR DISCLOSED TO ANY THIRD PARTY WITHOUT PRIOR WRITTEN CONSENT OF COMPAL ELECTRONICS, INC.

Title: HDD/CDROM

Size: Custom | Document Number: LA-2931 | Rev: 0.3

Date: Thursday, August 18, 2005 | Sheet 23 of 48

http://hobi-elektronika.net

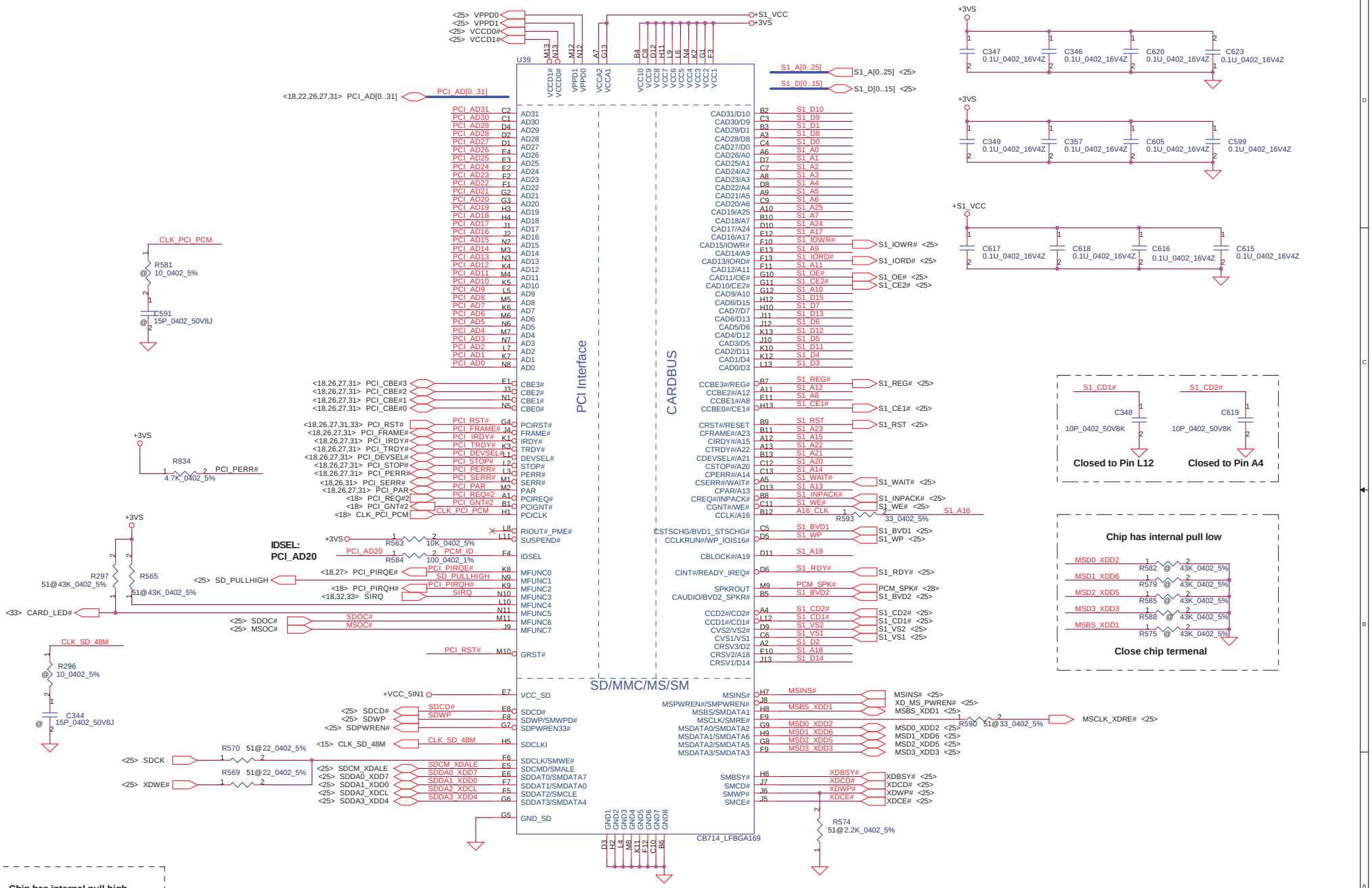

SDCD# & SDWP# & MSINS# have internal 30Kohm pull up resistor

Security Classification	Compal Secret Data		
Issued Date	2005/03/01	Deciphered Date	2005/04/06

THIS SHEET OF ENGINEERING DRAWING IS THE PROPRIETARY PROPERTY OF COMPAL ELECTRONICS, INC. AND CONTAINS CONFIDENTIAL AND TRADE SECRET INFORMATION. THIS SHEET MAY NOT BE TRANSFERED FROM THE CUSTODY OF THE COMPETENT DIVISION OF R&D DEPARTMENT EXCEPT AS AUTHORIZED BY COMPAL ELECTRONICS, INC. NEITHER THIS SHEET NOR THE INFORMATION IT CONTAINS MAY BE USED BY OR DISCLOSED TO ANY THIRD PARTY WITHOUT PRIOR WRITTEN CONSENT OF COMPAL ELECTRONICS, INC.

Title: PCMCIA ENE CB714

Size: Custom | Document Number: LA-2931 | Rev: 0.3

Date: Thursday, August 18, 2005 | Sheet 24 of 48

http://hobi-elektronika.net

PCMCIA Power Controller

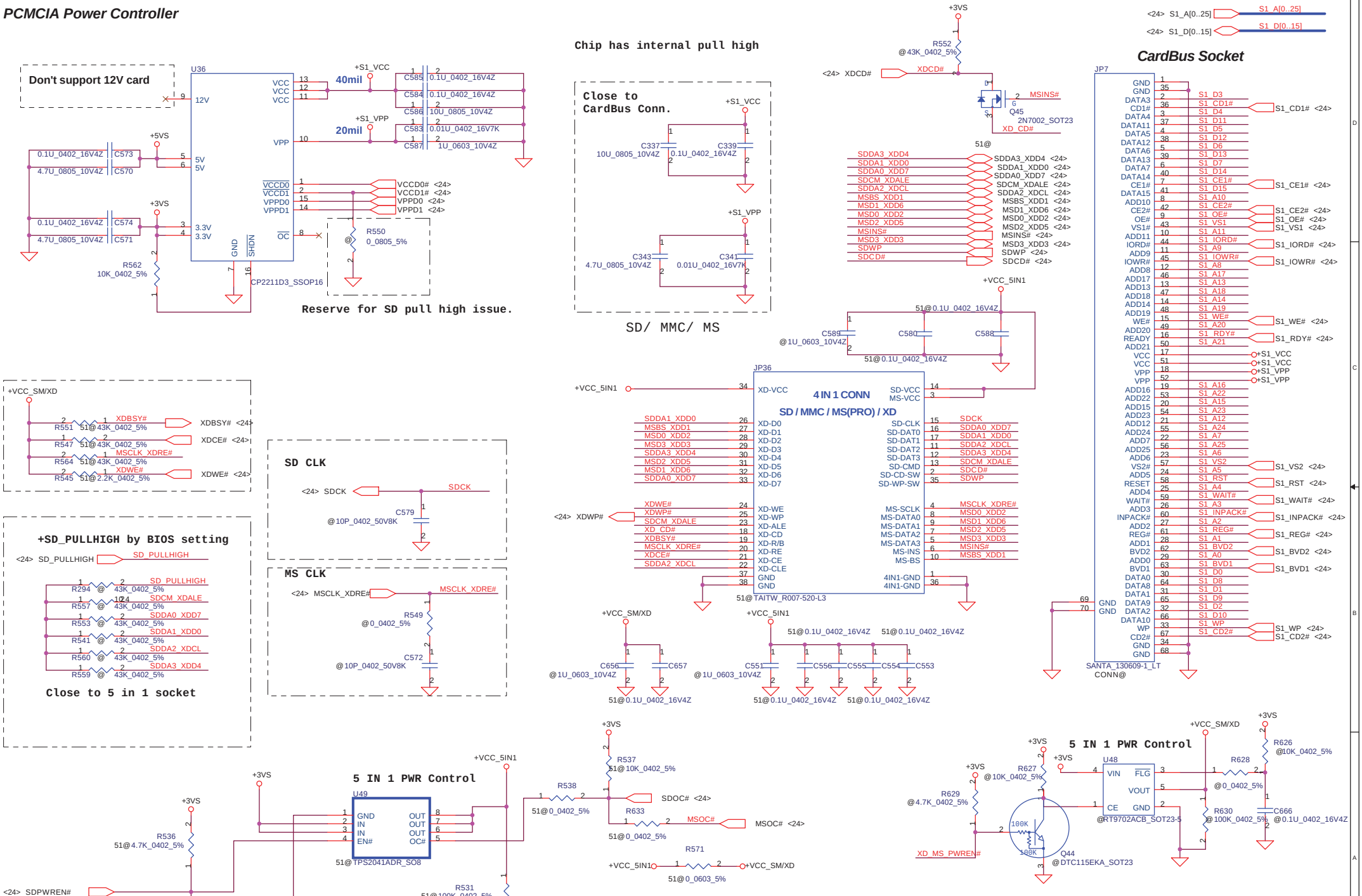

Security Classification	Compal Secret Data		
Issued Date	2005/03/01	Deciphered Date	2005/04/06

THIS SHEET OF ENGINEERING DRAWING IS THE PROPRIETARY PROPERTY OF COMPAL ELECTRONICS, INC. AND CONTAINS CONFIDENTIAL AND TRADE SECRET INFORMATION. THIS SHEET MAY NOT BE TRANSFERED FROM THE CUSTODY OF THE COMPETENT DIVISION OF R&D DEPARTMENT EXCEPT AS AUTHORIZED BY COMPAL ELECTRONICS, INC. NEITHER THIS SHEET NOR THE INFORMATION IT CONTAINS MAY BE USED BY OR DISCLOSED TO ANY THIRD PARTY WITHOUT PRIOR WRITTEN CONSENT OF COMPAL ELECTRONICS, INC.

Title: PCMCIA Socket

Size: Custom | Document Number: LA-2931 | Rev: 0.3

Date: Thursday, August 18, 2005 | Sheet 25 of 48

http://hobi-elektronika.net

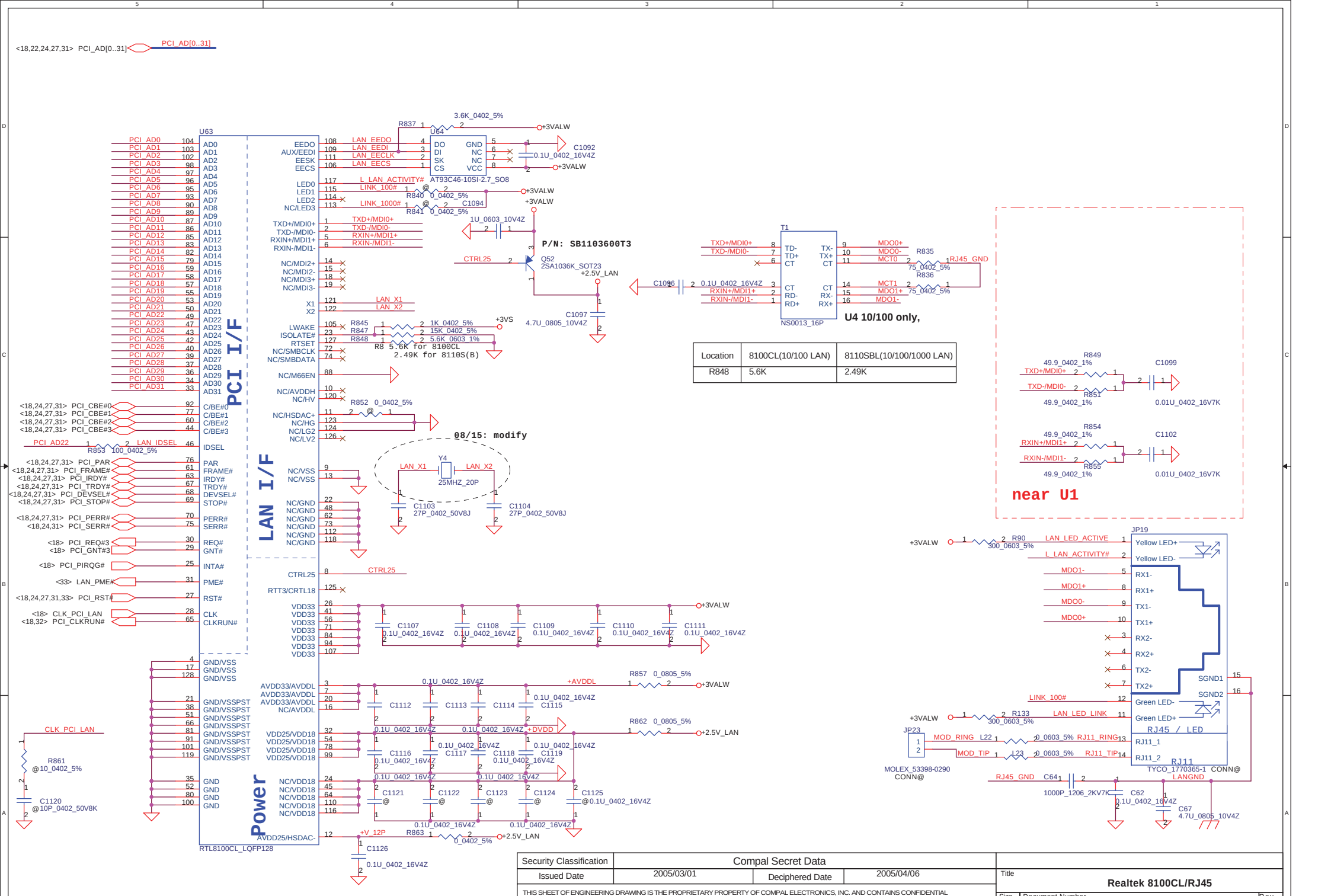

Location	8100CL(10/100 LAN)	8110SBL(10/100/1000 LAN)
R848	5.6K	2.49K

Security Classification	Compal Secret Data		
Issued Date	2005/03/01	Deciphered Date	2005/04/06

THIS SHEET OF ENGINEERING DRAWING IS THE PROPRIETARY PROPERTY OF COMPAL ELECTRONICS, INC. AND CONTAINS CONFIDENTIAL AND TRADE SECRET INFORMATION. THIS SHEET MAY NOT BE TRANSFERED FROM THE CUSTODY OF THE COMPETENT DIVISION OF R&D DEPARTMENT EXCEPT AS AUTHORIZED BY COMPAL ELECTRONICS, INC. NEITHER THIS SHEET NOR THE INFORMATION IT CONTAINS MAY BE USED BY OR DISCLOSED TO ANY THIRD PARTY WITHOUT PRIOR WRITTEN CONSENT OF COMPAL ELECTRONICS, INC.

Title: **Realtek 8100CL/RJ45**

Size: Custom | Document Number: **LA-2931** | Rev: 0.3

Date: Thursday, August 18, 2005 | Sheet 26 of 48

http://hobi-elektronika.net

Analog Pin		
Pin	VT6308S	VT6311S
74	XTPB1M	NC
75	XTPB1P	NC
76	XTPA1M	NC
77	XTPA1P	NC
78	XTPBIAS1	NC

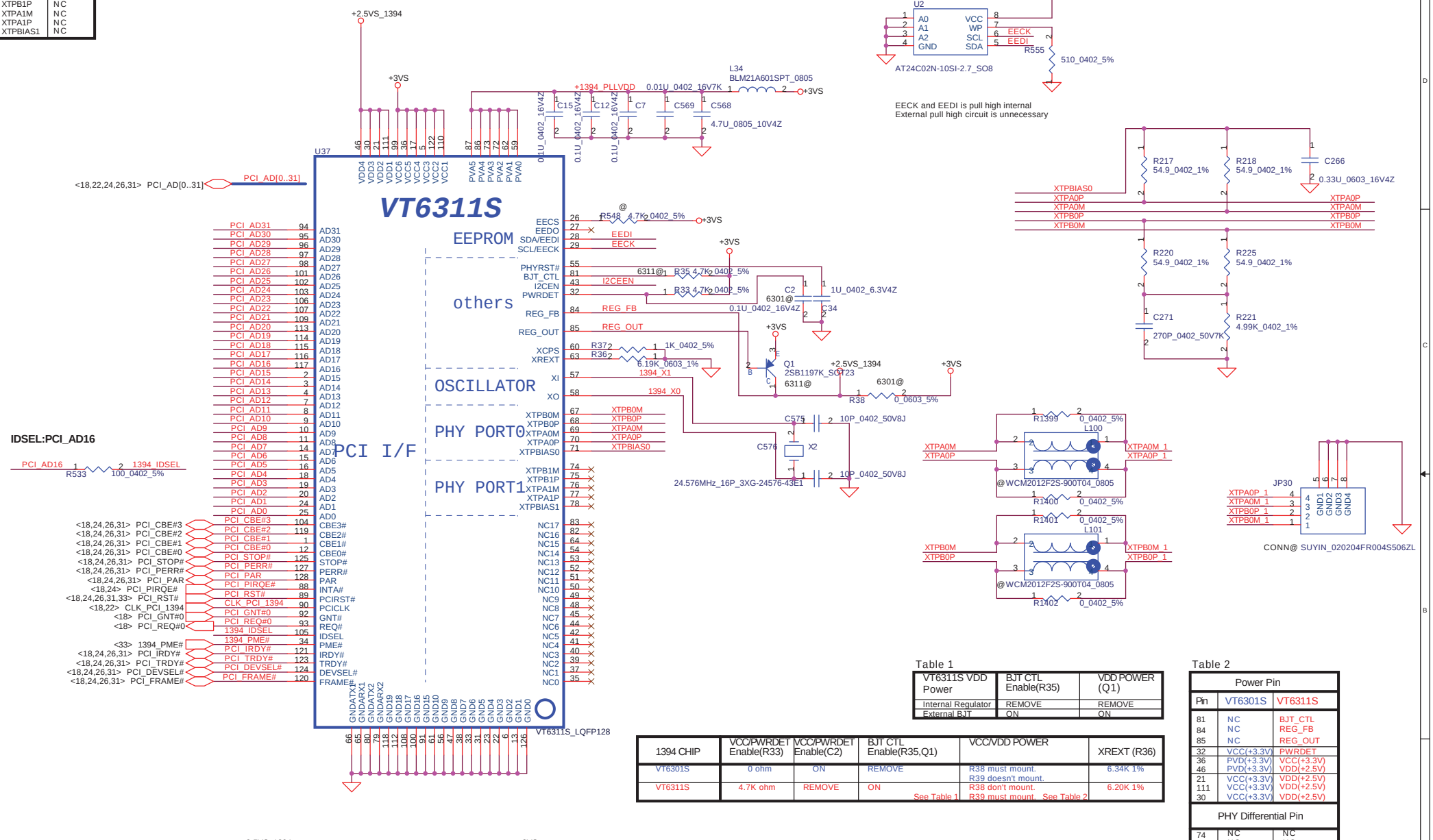

Table 1

VT6311S VDD Power	BJT CTL Enable(R35)	VDD POWER (Q1)
Internal Regulator	REMOVE	REMOVE
External BJT	ON	ON

1394 CHIP	VCC/PWRDET Enable(R33)	VCC/PWRDET Enable(C2)	BJT CTL Enable(R35,Q1)	VCC/VDD POWER	XREXT (R36)
VT6301S	0 ohm	ON	REMOVE	R38 must mount. R39 doesn't mount.	6.34K 1%
VT6311S	4.7K ohm	REMOVE	ON See Table 1	R38 don't mount. R39 must mount. See Table 2	6.20K 1%

Table 2

Power Pin		
Pin	VT6301S	VT6311S
81	NC	BJT_CTL
84	NC	REG_FB
85	NC	REG_OUT
32	VCC(+3.3V)	PWRDET
36	PVD(+3.3V)	VCC(+3.3V)
46	PVD(+3.3V)	VDD(+2.5V)
21	VCC(+3.3V)	VDD(+2.5V)
111	VCC(+3.3V)	VDD(+2.5V)
30	VCC(+3.3V)	VDD(+2.5V)
PHY Differential Pin		
74	NC	NC
75	NC	NC
76	NC	NC
77	NC	NC
78	NC	NC

Security Classification	Compal Secret Data		
Issued Date	2005/05/09	Deciphered Date	2006/03/11

THIS SHEET OF ENGINEERING DRAWING IS THE PROPRIETARY PROPERTY OF COMPAL ELECTRONICS, INC. AND CONTAINS CONFIDENTIAL AND TRADE SECRET INFORMATION. THIS SHEET MAY NOT BE TRANSFERED FROM THE CUSTODY OF THE COMPETENT DIVISION OF R&D DEPARTMENT EXCEPT AS AUTHORIZED BY COMPAL ELECTRONICS, INC. NEITHER THIS SHEET NOR THE INFORMATION IT CONTAINS MAY BE USED BY OR DISCLOSED TO ANY THIRD PARTY WITHOUT PRIOR WRITTEN CONSENT OF COMPAL ELECTRONICS, INC.

Title: VIA 1394 VT6311S

Size: Custom | Document Number: LA-2931 | Rev: 0.3

Date: Thursday, August 18, 2005 | Sheet 27 of 48

http://hobi-elektronika.net

AC97 Codec

28.7K for Module Design (VDDA = 4.702)

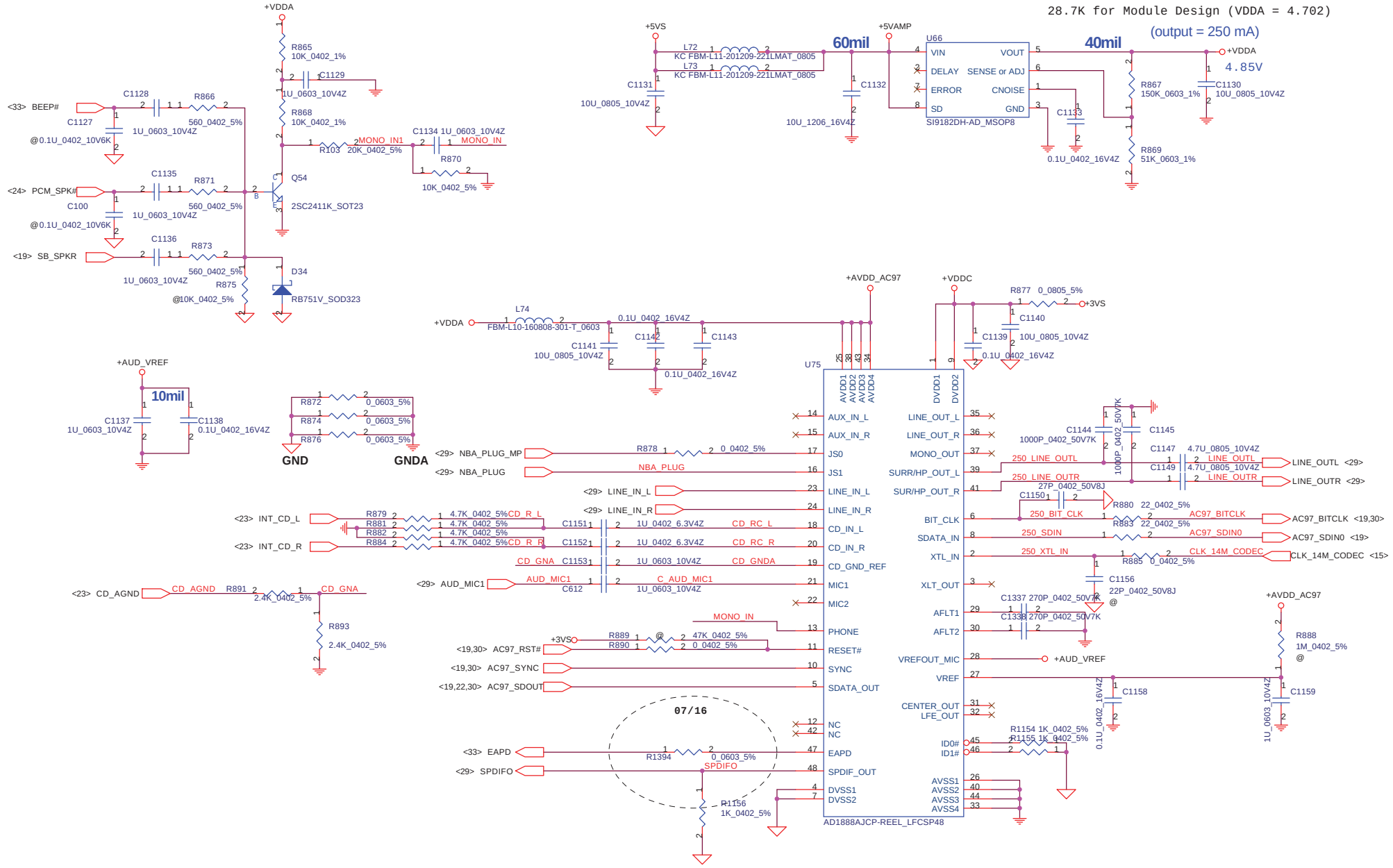

Security Classification	Compal Secret Data		
Issued Date	2005/03/01	Deciphered Date	2005/04/06

THIS SHEET OF ENGINEERING DRAWING IS THE PROPRIETARY PROPERTY OF COMPAL ELECTRONICS, INC. AND CONTAINS CONFIDENTIAL AND TRADE SECRET INFORMATION. THIS SHEET MAY NOT BE TRANSFERED FROM THE CUSTODY OF THE COMPETENT DIVISION OF R&D DEPARTMENT EXCEPT AS AUTHORIZED BY COMPAL ELECTRONICS, INC. NEITHER THIS SHEET NOR THE INFORMATION IT CONTAINS MAY BE USED BY OR DISCLOSED TO ANY THIRD PARTY WITHOUT PRIOR WRITTEN CONSENT OF COMPAL ELECTRONICS, INC.

Title: **AC97 Codec AD1888**

Size: Custom | Document Number: **LA-2931** | Rev: 0.3

Date: Thursday, August 18, 2005 | Sheet 28 of 48

http://hobi-elektronika.net

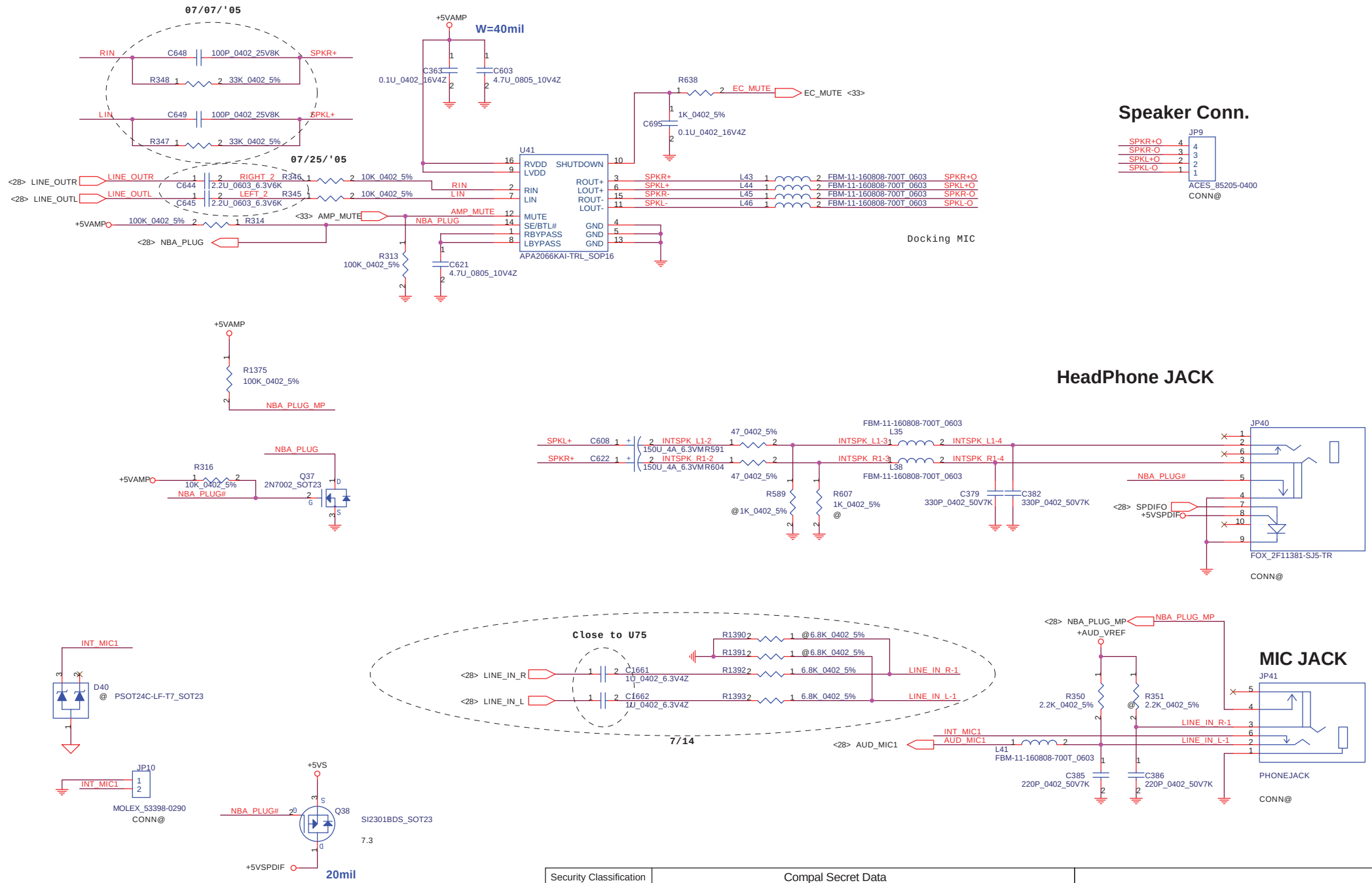

Security Classification	Compal Secret Data		
Issued Date	2005/03/01	Deciphered Date	2005/04/06

THIS SHEET OF ENGINEERING DRAWING IS THE PROPRIETARY PROPERTY OF COMPAL ELECTRONICS, INC. AND CONTAINS CONFIDENTIAL AND TRADE SECRET INFORMATION. THIS SHEET MAY NOT BE TRANSFERED FROM THE CUSTODY OF THE COMPETENT DIVISION OF R&D DEPARTMENT EXCEPT AS AUTHORIZED BY COMPAL ELECTRONICS, INC. NEITHER THIS SHEET NOR THE INFORMATION IT CONTAINS MAY BE USED BY OR DISCLOSED TO ANY THIRD PARTY WITHOUT PRIOR WRITTEN CONSENT OF COMPAL ELECTRONICS, INC.

Title: **AMP & Audio Jack**

Size: Custom | Document Number: **LA-2931** | Rev: 0.3

Date: Thursday, August 18, 2005 | Sheet 29 of 48

http://hobi-elektronika.net

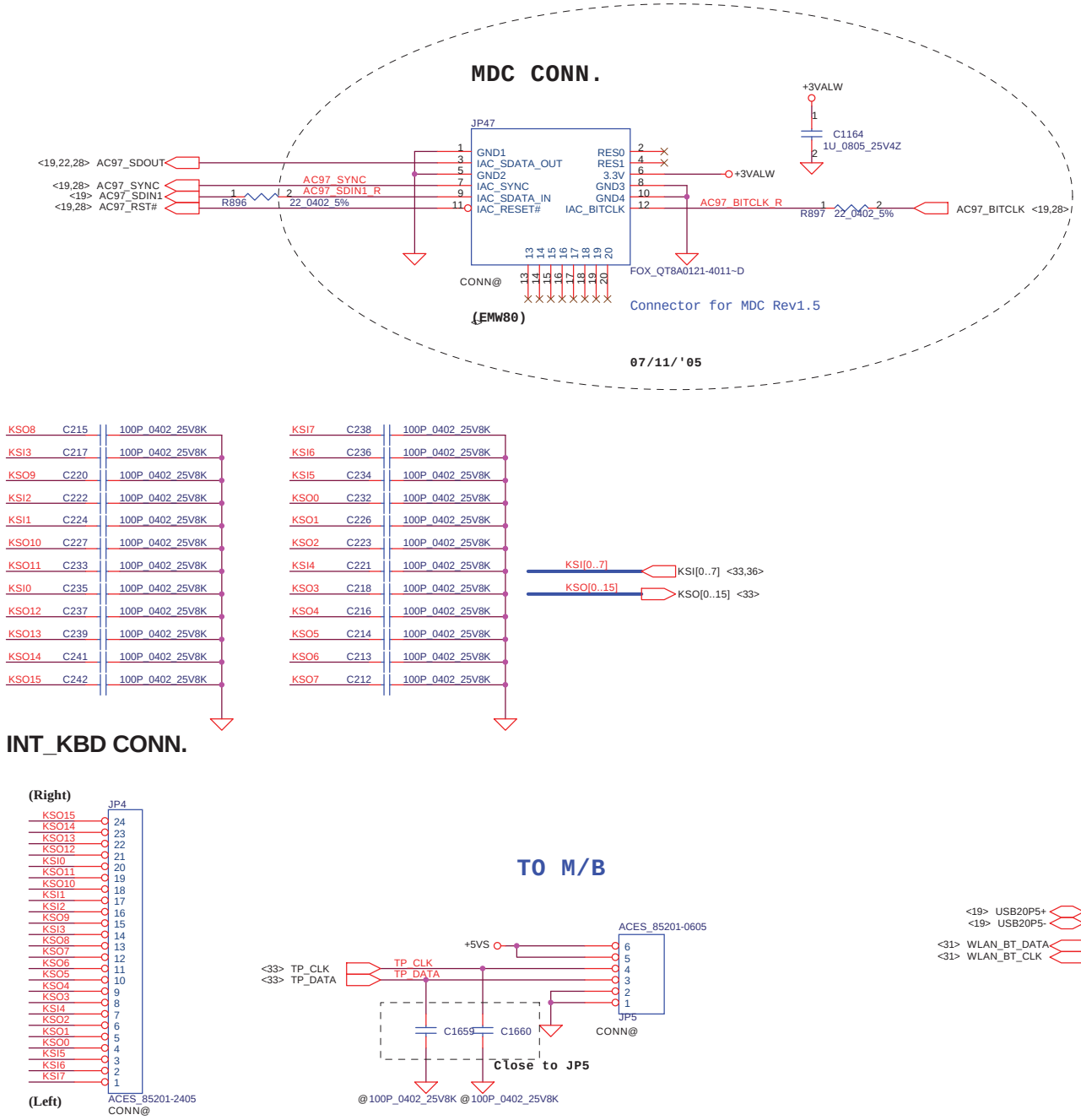

Security Classification	Compal Secret Data		
Issued Date	2005/03/01	Deciphered Date	2005/04/06

THIS SHEET OF ENGINEERING DRAWING IS THE PROPRIETARY PROPERTY OF COMPAL ELECTRONICS, INC. AND CONTAINS CONFIDENTIAL AND TRADE SECRET INFORMATION. THIS SHEET MAY NOT BE TRANSFERED FROM THE CUSTODY OF THE COMPETENT DIVISION OF R&D DEPARTMENT EXCEPT AS AUTHORIZED BY COMPAL ELECTRONICS, INC. NEITHER THIS SHEET NOR THE INFORMATION IT CONTAINS MAY BE USED BY OR DISCLOSED TO ANY THIRD PARTY WITHOUT PRIOR WRITTEN CONSENT OF COMPAL ELECTRONICS, INC.

Title: MDA/BT/KBD/TP Conn

Size: Custom | Document Number: LA-2931 | Rev: 0.3

Date: Thursday, August 18, 2005 | Sheet 30 of 48

http://hobi-elektronika.net

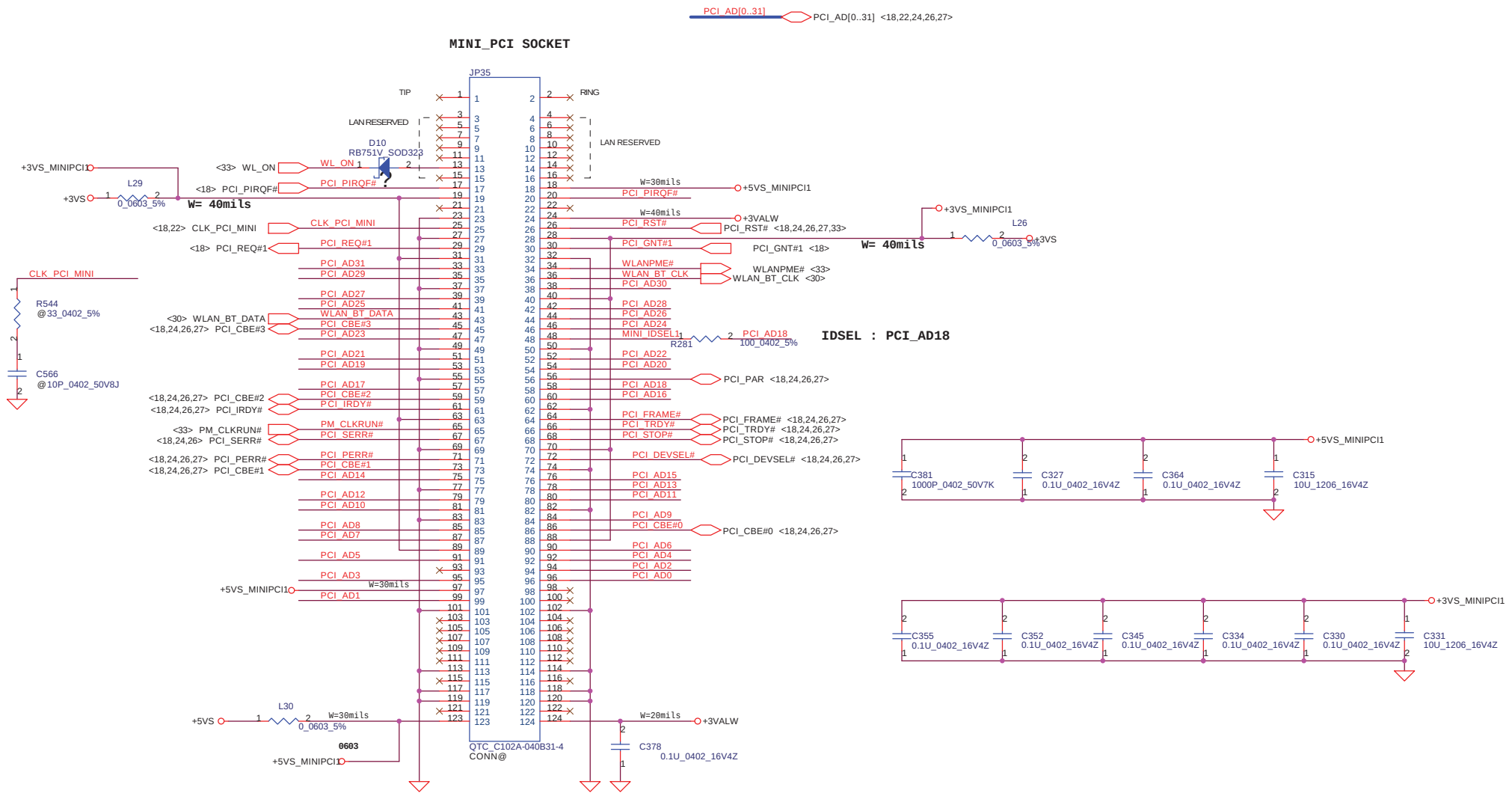

Security Classification	Compal Secret Data		
Issued Date	2005/03/01	Deciphered Date	2005/04/06

THIS SHEET OF ENGINEERING DRAWING IS THE PROPRIETARY PROPERTY OF COMPAL ELECTRONICS, INC. AND CONTAINS CONFIDENTIAL AND TRADE SECRET INFORMATION. THIS SHEET MAY NOT BE TRANSFERED FROM THE CUSTODY OF THE COMPETENT DIVISION OF R&D DEPARTMENT EXCEPT AS AUTHORIZED BY COMPAL ELECTRONICS, INC. NEITHER THIS SHEET NOR THE INFORMATION IT CONTAINS MAY BE USED BY OR DISCLOSED TO ANY THIRD PARTY WITHOUT PRIOR WRITTEN CONSENT OF COMPAL ELECTRONICS, INC.

Title: **MINI PCI**

Size: Custom | Document Number: **LA-2931** | Rev: 0.3

Date: Thursday, August 18, 2005 | Sheet 31 of 48

http://hobi-elektronika.net

SUPER I/O SMsC FDC47N207

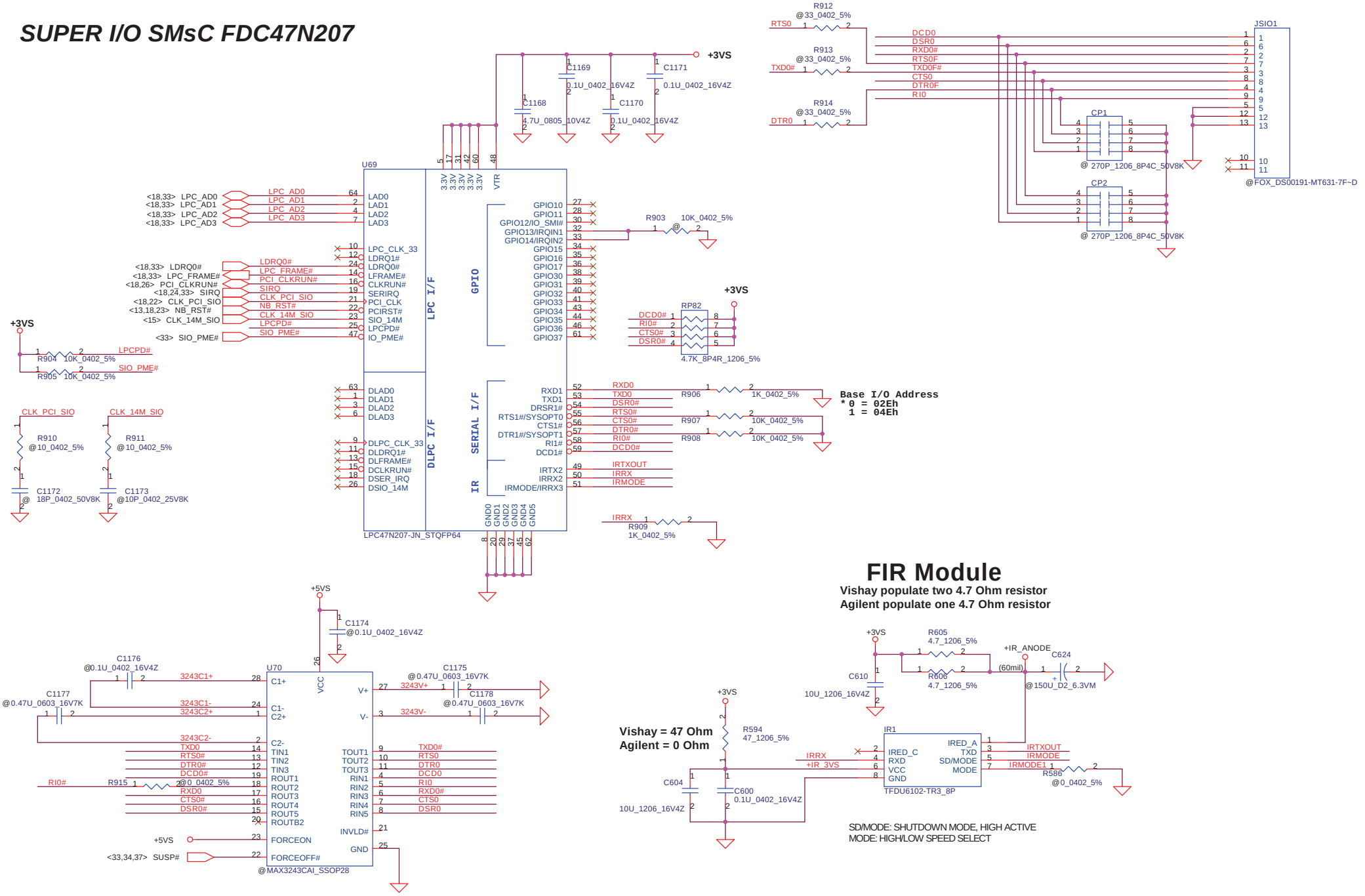

Security Classification	Compal Secret Data		
Issued Date	2005/03/01	Deciphered Date	2005/04/06

THIS SHEET OF ENGINEERING DRAWING IS THE PROPRIETARY PROPERTY OF COMPAL ELECTRONICS, INC. AND CONTAINS CONFIDENTIAL AND TRADE SECRET INFORMATION. THIS SHEET MAY NOT BE TRANSFERED FROM THE CUSTODY OF THE COMPETENT DIVISION OF R&D DEPARTMENT EXCEPT AS AUTHORIZED BY COMPAL ELECTRONICS, INC. NEITHER THIS SHEET NOR THE INFORMATION IT CONTAINS MAY BE USED BY OR DISCLOSED TO ANY THIRD PARTY WITHOUT PRIOR WRITTEN CONSENT OF COMPAL ELECTRONICS, INC.

Title: **Super IO/FIR**

Size: Custom | Document Number: **LA-2931** | Rev: 0.3

Date: Thursday, August 18, 2005 | Sheet 32 of 48

http://hobi-elektronika.net

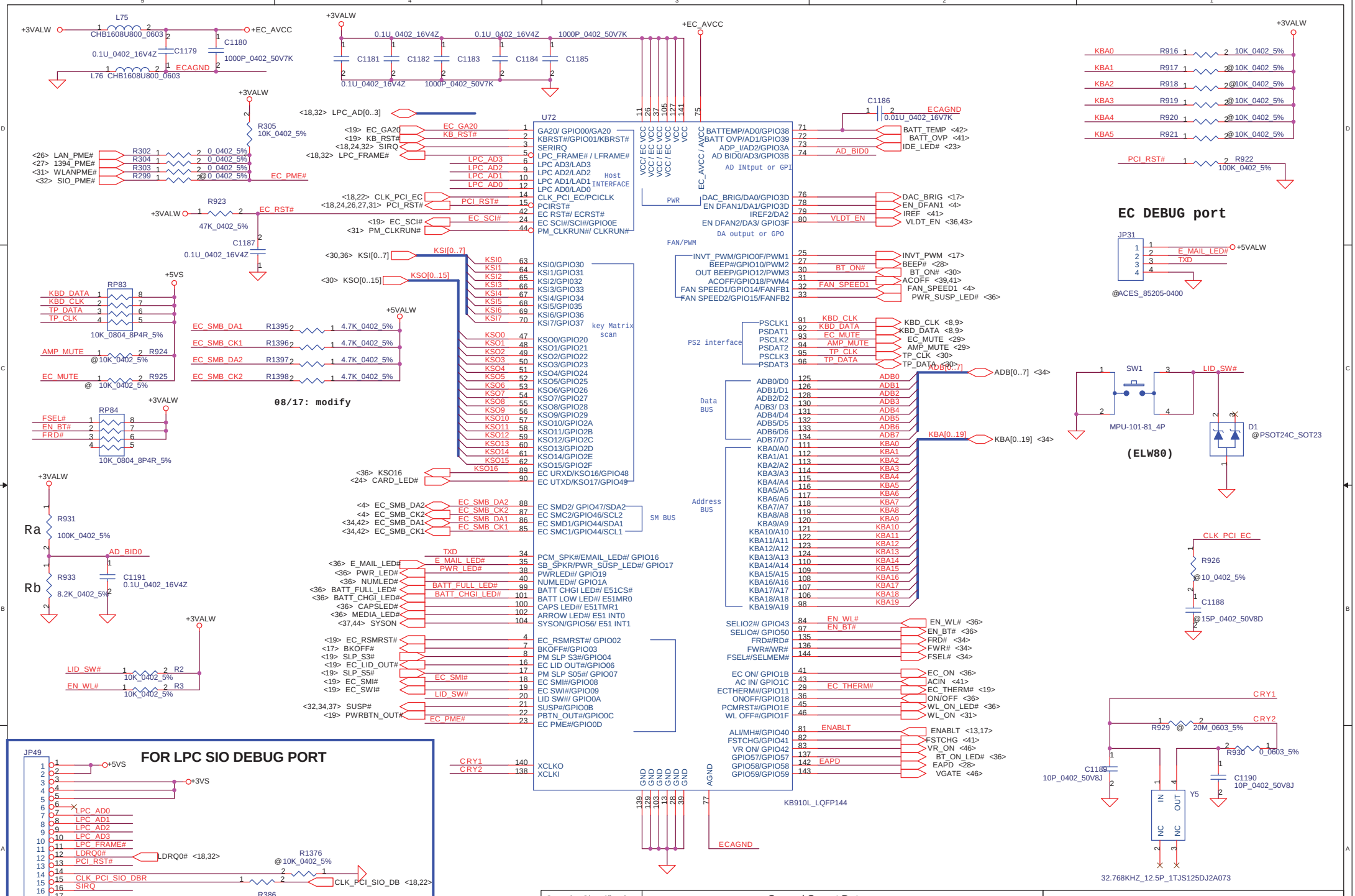

Security Classification	Compal Secret Data		
Issued Date	2005/03/01	Deciphered Date	2005/04/06

THIS SHEET OF ENGINEERING DRAWING IS THE PROPRIETARY PROPERTY OF COMPAL ELECTRONICS, INC. AND CONTAINS CONFIDENTIAL AND TRADE SECRET INFORMATION. THIS SHEET MAY NOT BE TRANSFERED FROM THE CUSTODY OF THE COMPETENT DIVISION OF R&D DEPARTMENT EXCEPT AS AUTHORIZED BY COMPAL ELECTRONICS, INC. NEITHER THIS SHEET NOR THE INFORMATION IT CONTAINS MAY BE USED BY OR DISCLOSED TO ANY THIRD PARTY WITHOUT PRIOR WRITTEN CONSENT OF COMPAL ELECTRONICS, INC.

Title: **KB910L/LIT SW**

Size: Custom | Document Number: **LA-2931** | Rev: 0.3

Date: Thursday, August 18, 2005 | Sheet 33 of 48

http://hobi-elektronika.net

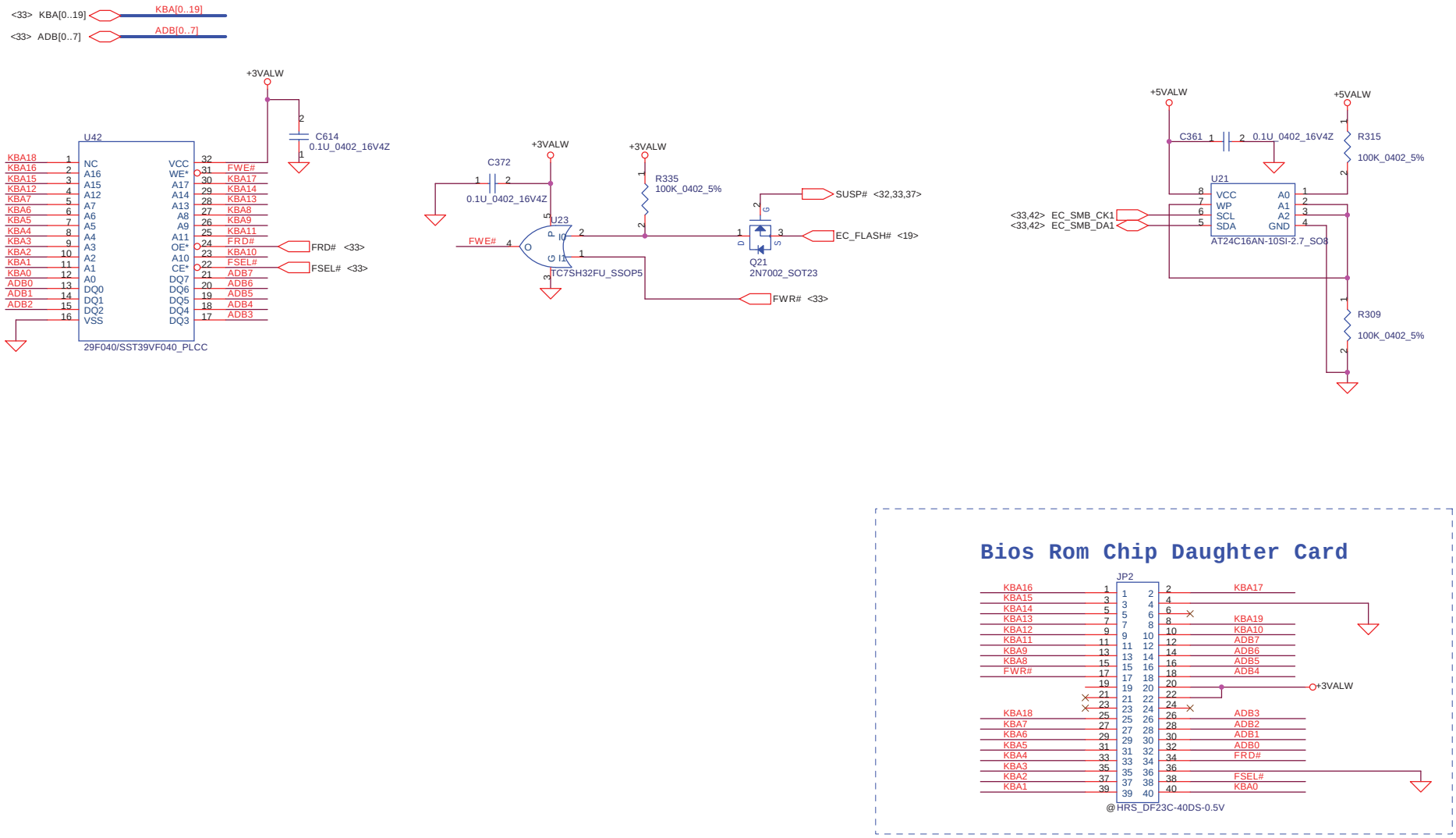

Security Classification	Compal Secret Data		
Issued Date	2005/03/01	Deciphered Date	2005/04/06

THIS SHEET OF ENGINEERING DRAWING IS THE PROPRIETARY PROPERTY OF COMPAL ELECTRONICS, INC. AND CONTAINS CONFIDENTIAL AND TRADE SECRET INFORMATION. THIS SHEET MAY NOT BE TRANSFERED FROM THE CUSTODY OF THE COMPETENT DIVISION OF R&D DEPARTMENT EXCEPT AS AUTHORIZED BY COMPAL ELECTRONICS, INC. NEITHER THIS SHEET NOR THE INFORMATION IT CONTAINS MAY BE USED BY OR DISCLOSED TO ANY THIRD PARTY WITHOUT PRIOR WRITTEN CONSENT OF COMPAL ELECTRONICS, INC.

Title: **BIOS**

Size: Custom | Document Number: **LA-2931** | Rev: 0.3

Date: Thursday, August 18, 2005 | Sheet 34 of 48

http://hobi-elektronika.net

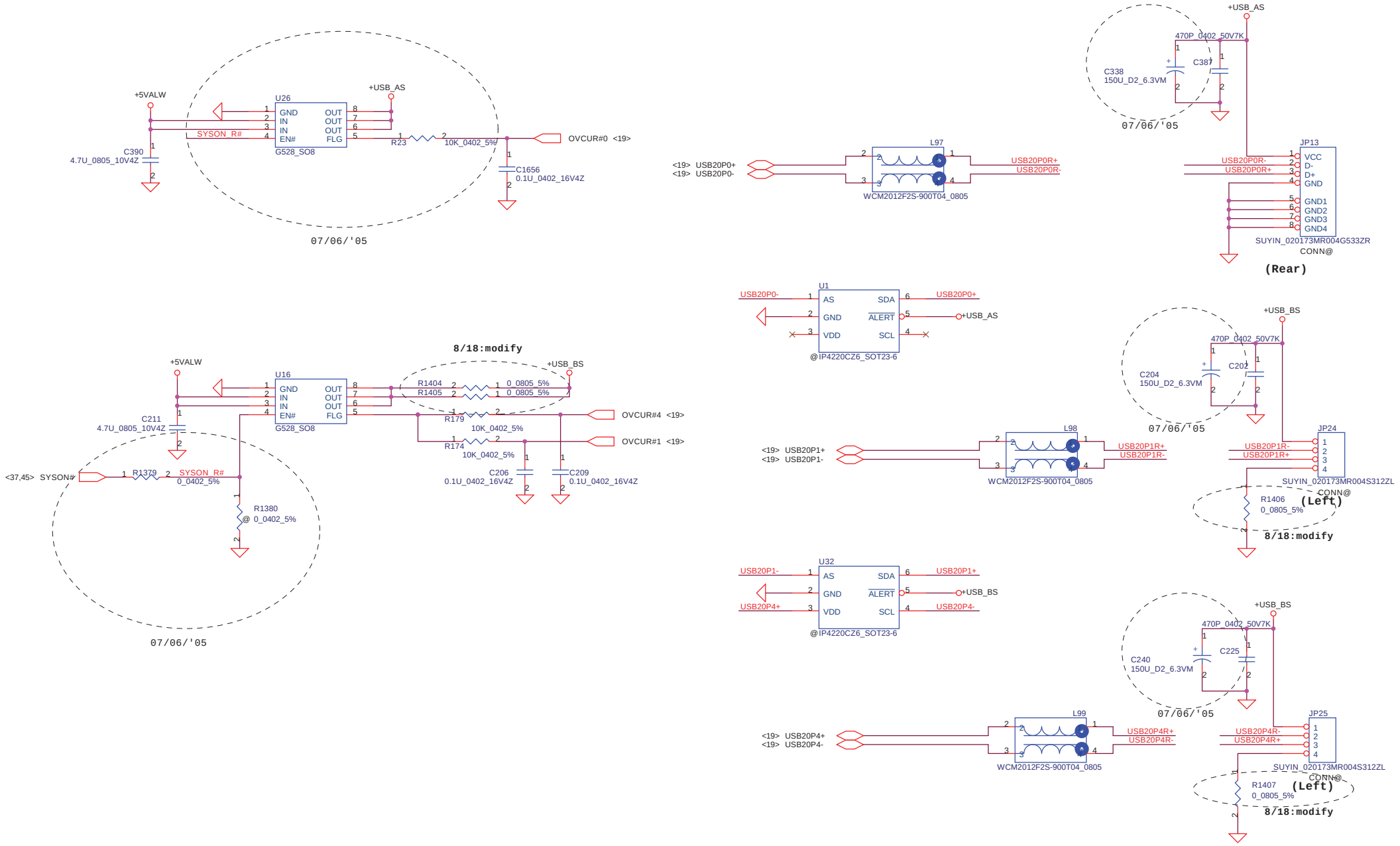

Security Classification	Compal Secret Data		
Issued Date	2005/03/01	Deciphered Date	2005/04/06

THIS SHEET OF ENGINEERING DRAWING IS THE PROPRIETARY PROPERTY OF COMPAL ELECTRONICS, INC. AND CONTAINS CONFIDENTIAL AND TRADE SECRET INFORMATION. THIS SHEET MAY NOT BE TRANSFERED FROM THE CUSTODY OF THE COMPETENT DIVISION OF R&D DEPARTMENT EXCEPT AS AUTHORIZED BY COMPAL ELECTRONICS, INC. NEITHER THIS SHEET NOR THE INFORMATION IT CONTAINS MAY BE USED BY OR DISCLOSED TO ANY THIRD PARTY WITHOUT PRIOR WRITTEN CONSENT OF COMPAL ELECTRONICS, INC.

Title: **USB 2.0 Conn**

Size: Custom | Document Number: **LA-2931** | Rev: 0.3

Date: Thursday, August 18, 2005 | Sheet 35 of 48

http://hobi-elektronika.net

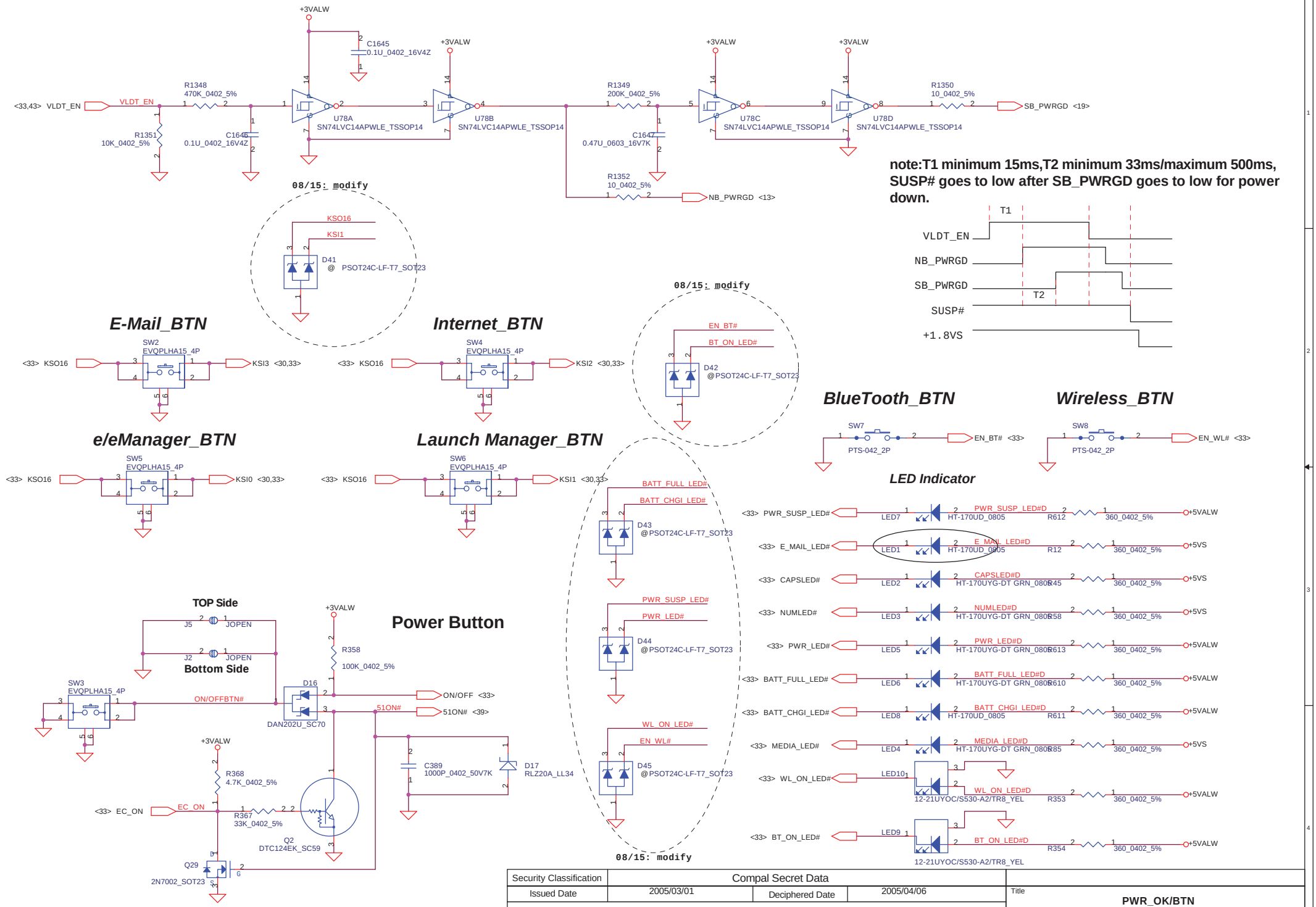

Security Classification	Compal Secret Data		
Issued Date	2005/03/01	Deciphered Date	2005/04/06

THIS SHEET OF ENGINEERING DRAWING IS THE PROPRIETARY PROPERTY OF COMPAL ELECTRONICS, INC. AND CONTAINS CONFIDENTIAL AND TRADE SECRET INFORMATION. THIS SHEET MAY NOT BE TRANSFERED FROM THE CUSTODY OF THE COMPETENT DIVISION OF R&D DEPARTMENT EXCEPT AS AUTHORIZED BY COMPAL ELECTRONICS, INC. NEITHER THIS SHEET NOR THE INFORMATION IT CONTAINS MAY BE USED BY OR DISCLOSED TO ANY THIRD PARTY WITHOUT PRIOR WRITTEN CONSENT OF COMPAL ELECTRONICS, INC.

Title: PWR_OK/BTN

Size: Custom | Document Number: LA-2931 | Rev: 0.3

Date: Thursday, August 18, 2005 | Sheet 36 of 48

http://hobi-elektronika.net

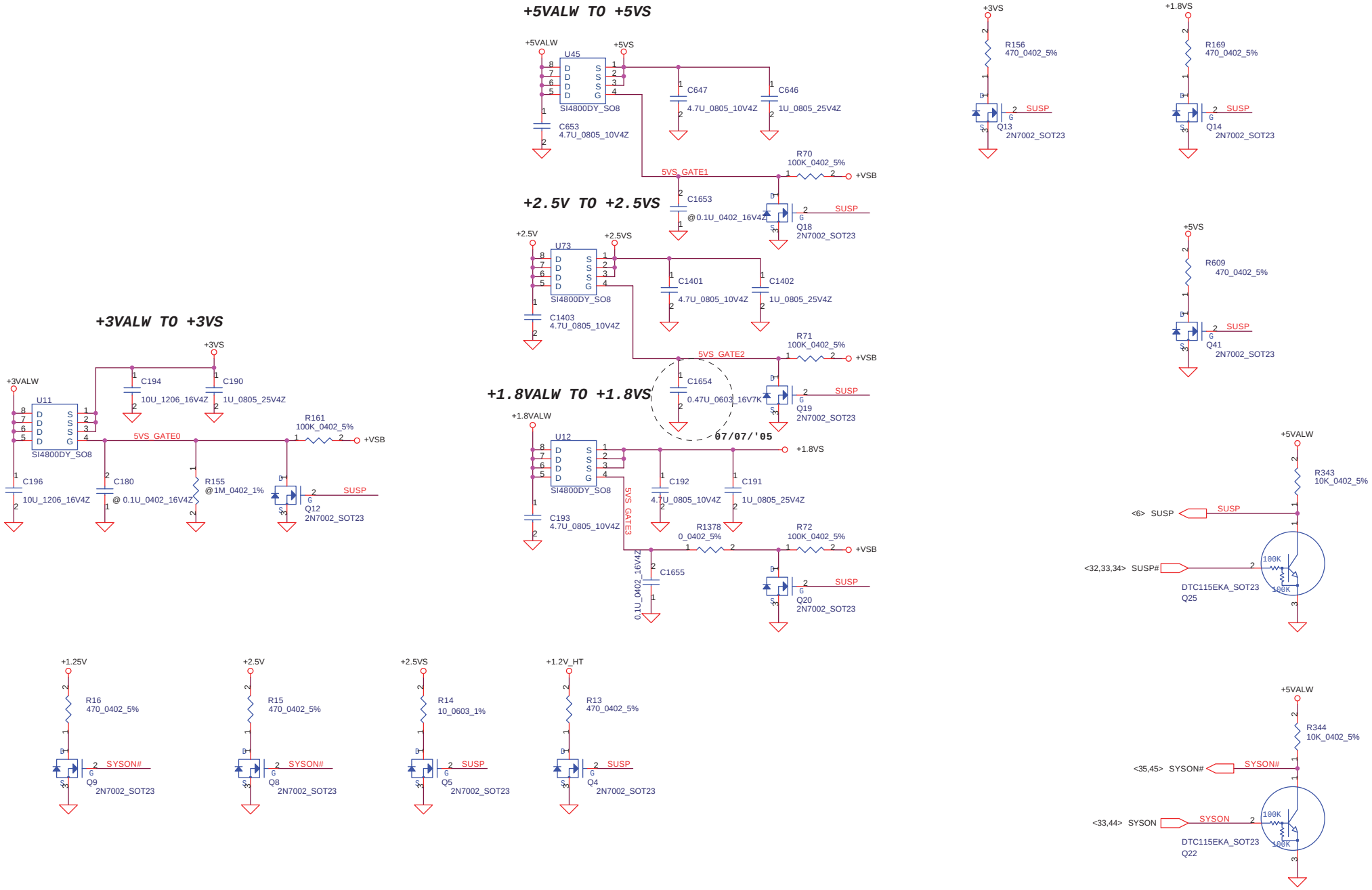

PROPRIETARY NOTE

Security Classification	Compal Secret Data		
Issued Date	2005/03/01	Deciphered Date	2005/04/06

THIS SHEET OF ENGINEERING DRAWING IS THE PROPRIETARY PROPERTY OF COMPAL ELECTRONICS, INC. AND CONTAINS CONFIDENTIAL AND TRADE SECRET INFORMATION. THIS SHEET MAY NOT BE TRANSFERED FROM THE CUSTODY OF THE COMPETENT DIVISION OF R&D DEPARTMENT EXCEPT AS AUTHORIZED BY COMPAL ELECTRONICS, INC. NEITHER THIS SHEET NOR THE INFORMATION IT CONTAINS MAY BE USED BY OR DISCLOSED TO ANY THIRD PARTY WITHOUT PRIOR WRITTEN CONSENT OF COMPAL ELECTRONICS, INC.

Title: **DC Interface**

Size: B | Document Number: **LA-2931** | Rev: 0.3

Date: Thursday, August 18, 2005 | Sheet 37 of 48

http://hobi-elektronika.net

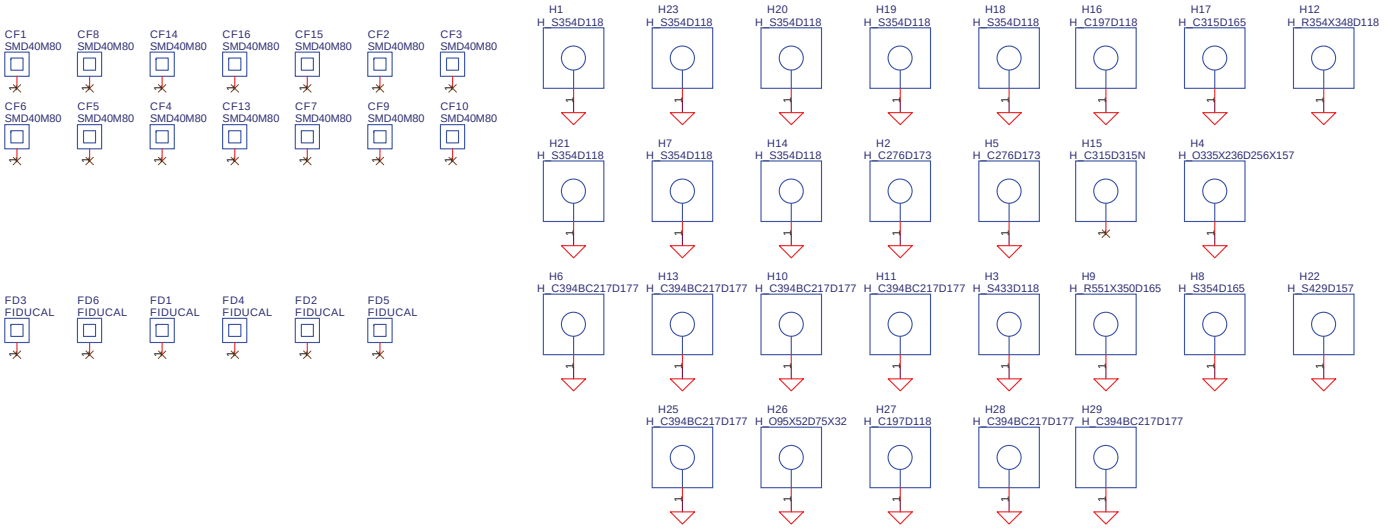

Chip_Name	Label_Name
EXP_TXP0/SDVOB_RED	PCIE_MTX_C_GRX_P0
EXP_TXN0/SDVOB_RED#	PCIE_MTX_C_GRX_N0
EXP_TXP1/SDVOB_GREEN	PCIE_MTX_C_GRX_P1
EXP_TXN1/SDVOB_GREEN#	PCIE_MTX_C_GRX_N1
EXP_TXP2/SDVOB_BLUE	PCIE_MTX_C_GRX_P2
EXP_TXN2/SDVOB_BLUE#	PCIE_MTX_C_GRX_N2
EXP_TXP3/SDVOB_CLKP	PCIE_MTX_C_GRX_P3
EXP_TXN3/SDVOB_CLKN	PCIE_MTX_C_GRX_N3
EXP_RXP1/SDVO_INT	PCEI_GTX_C_MRX_P1
EXP_RXN1/SDVO_INT#	PCEI_GTX_C_MRX_N1

http://hobi-elektronika.net

Security Classification	Compal Secret Data		
Issued Date	2005/03/01	Deciphered Date	2005/04/06

THIS SHEET OF ENGINEERING DRAWING IS THE PROPRIETARY PROPERTY OF COMPAL ELECTRONICS, INC. AND CONTAINS CONFIDENTIAL AND TRADE SECRET INFORMATION. THIS SHEET MAY NOT BE TRANSFERED FROM THE CUSTODY OF THE COMPETENT DIVISION OF R&D DEPARTMENT EXCEPT AS AUTHORIZED BY COMPAL ELECTRONICS, INC. NEITHER THIS SHEET NOR THE INFORMATION IT CONTAINS MAY BE USED BY OR DISCLOSED TO ANY THIRD PARTY WITHOUT PRIOR WRITTEN CONSENT OF COMPAL ELECTRONICS, INC.

Title: **Screws**

Size: Custom | Document Number: **LA-2931** | Rev: 0.3

Date: Thursday, August 18, 2005 | Sheet 38 of 48

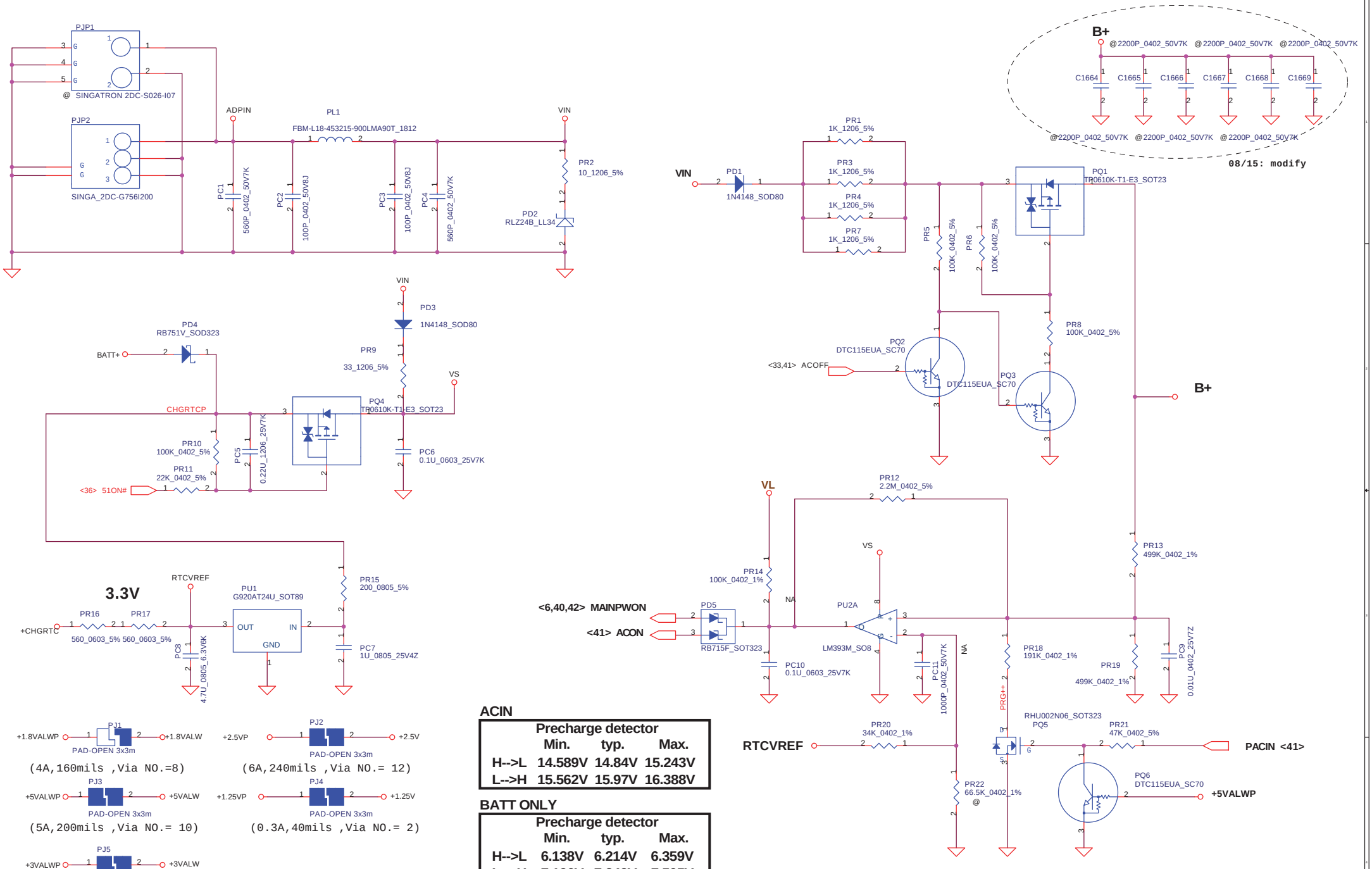

ACIN

Precharge detector	Min.	typ.	Max.
H-->L	14.589V	14.84V	15.243V
L-->H	15.562V	15.97V	16.388V

BATT ONLY

Precharge detector	Min.	typ.	Max.
H-->L	6.138V	6.214V	6.359V
L-->H	7.196V	7.349V	7.505V

Security Classification	Compal Secret Data		
Issued Date	2005/05/10	Deciphered Date	2006/05/10

THIS SHEET OF ENGINEERING DRAWING IS THE PROPRIETARY PROPERTY OF COMPAL ELECTRONICS, INC. AND CONTAINS CONFIDENTIAL AND TRADE SECRET INFORMATION. THIS SHEET MAY NOT BE TRANSFERED FROM THE CUSTODY OF THE COMPETENT DIVISION OF R&D DEPARTMENT EXCEPT AS AUTHORIZED BY COMPAL ELECTRONICS, INC. NEITHER THIS SHEET NOR THE INFORMATION IT CONTAINS MAY BE USED BY OR DISCLOSED TO ANY THIRD PARTY WITHOUT PRIOR WRITTEN CONSENT OF COMPAL ELECTRONICS, INC.

Compal Electronics, Inc.

Title: DCIN/DECTOR

Size: B | Document Number | Rev: 0.3

Date: Thursday, August 18, 2005 | Sheet 39 of 48

http://hobi-elektronika.net

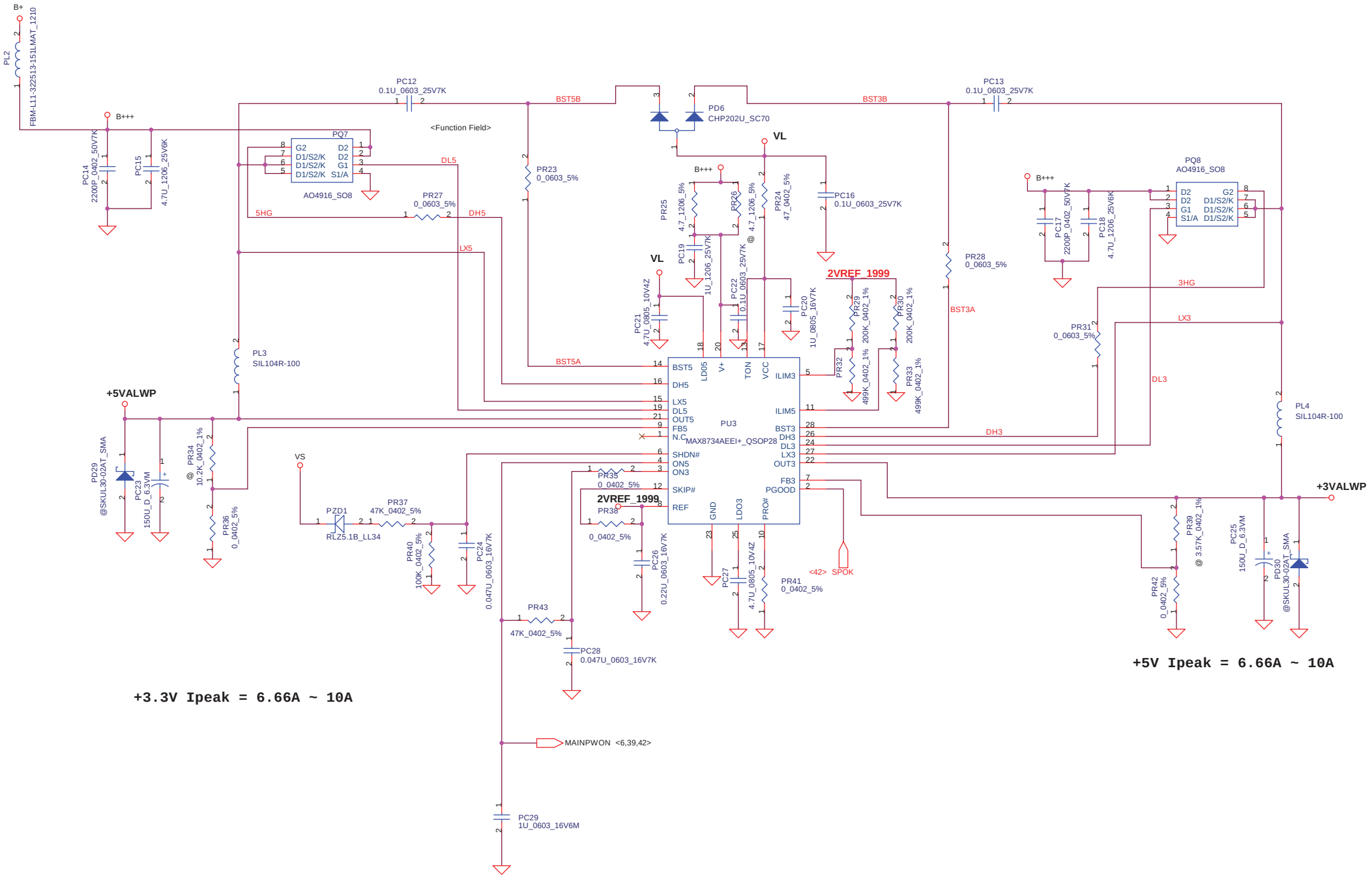

Security Classification	Compal Secret Data		
Issued Date	2005/05/10	Deciphered Date	2006/05/10

THIS SHEET OF ENGINEERING DRAWING IS THE PROPRIETARY PROPERTY OF COMPAL ELECTRONICS, INC. AND CONTAINS CONFIDENTIAL AND TRADE SECRET INFORMATION. THIS SHEET MAY NOT BE TRANSFERED FROM THE CUSTODY OF THE COMPETENT DIVISION OF R&D DEPARTMENT EXCEPT AS AUTHORIZED BY COMPAL ELECTRONICS, INC. NEITHER THIS SHEET NOR THE INFORMATION IT CONTAINS MAY BE USED BY OR DISCLOSED TO ANY THIRD PARTY WITHOUT PRIOR WRITTEN CONSENT OF COMPAL ELECTRONICS, INC.

Compal Electronics, Inc.

Title: +5VALWP/+3VALWP

Size: Custom | Document Number | Rev 0.3

Date: Thursday, August 18, 2005 | Sheet 40 of 48

http://hobi-elektronika.net

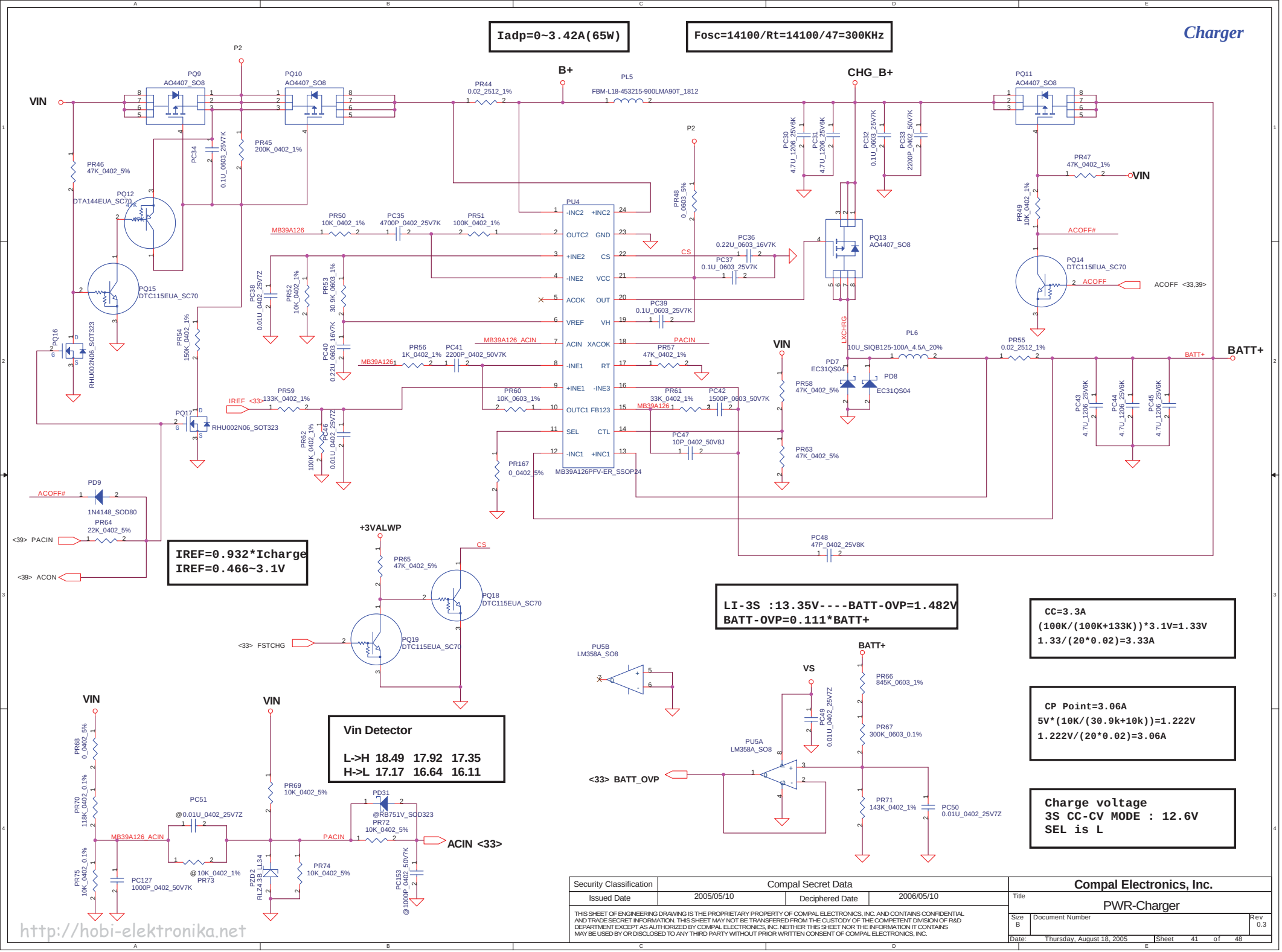
Charger
Iadp=0~3.42A(65W)
Fosc=14100/Rt=14100/47=300KHz
VIN
P2
PQ9 AO4407_SO8
PQ10 AO4407_SO8
PR44 0.02_2512_1%
B+
PL5 FBM-L18-453215-900LMA90T_1812
CHG_B+
PQ11 AO4407_SO8
PR46 47K_0402_5%
PC34 0.1U_0603_25V7K
PR45 200K_0402_1%
PQ12 DTA144EUA_SC70
PQ15 DTC115EUA_SC70
PQ16 RHU002N06_SOT323
PR54 150K_0402_1%
PC38 0.01U_0402_25V7Z
PR52 10K_0402_1%
PR53 30.9K_0603_1%
PC40 0.22U_0603_16V7K
PR50 10K_0402_1%
PC35 4700P_0402_25V7K
PR51 100K_0402_1%
MB39A126
PU4
-INC2 +INC2
OUTC2 GND
+INE2 CS
-INE2 VCC
ACOK OUT
VREF VH
ACIN XACOK
-INE1 RT
+INE1 -INE3
OUTC1 FB123
SEL CTL
-INC1 +INC1
MB39A126PFV-ER_SSOP24
PR48 0_0603_5%
PC36 0.22U_0603_16V7K
PC37 0.1U_0603_25V7K
PC39 0.1U_0603_25V7K
CS
PQ13 AO4407_SO8
PC30 4.7U_1206_25V6K
PC31 4.7U_1206_25V6K
PC32 0.1U_0603_25V7K
PC33 2200P_0402_50V7K
PR47 47K_0402_1%
PR49 10K_0402_1%
ACOFF#
PQ14 DTC115EUA_SC70
ACOFF
ACOFF <33,39>
MB39A126_ACIN
PACIN
PR56 1K_0402_1%
PC41 2200P_0402_50V7K
PR57 47K_0402_1%
PR59 133K_0402_1%
IREF <33>
PQ17 RHU002N06_SOT323
PR62 100K_0402_1%
PC46 0.01U_0402_25V7Z
PR60 10K_0603_1%
PR61 33K_0402_1%
PC42 1500P_0603_50V7K
PC47 10P_0402_50V8J
PR167 0_0402_5%
LXCHRG
PL6 10U_SIQB125-100A_4.5A_20%
PD7 EC31QS04
PD8 EC31QS04
PR58 47K_0402_5%
PR63 47K_0402_5%
PR55 0.02_2512_1%
BATT+
PC43 4.7U_1206_25V6K
PC44 4.7U_1206_25V6K
PC45 4.7U_1206_25V6K
PC48 47P_0402_25V8K
PD9 1N4148_SOD80
ACOFF#
PR64 22K_0402_5%
<39> PACIN
<39> ACON
IREF=0.932*Icharge
IREF=0.466~3.1V
+3VALWP
PR65 47K_0402_5%
PQ18 DTC115EUA_SC70
PQ19 DTC115EUA_SC70
<33> FSTCHG
LI-3S :13.35V----BATT-OVP=1.482V
BATT-OVP=0.111*BATT+
CC=3.3A
(100K/(100K+133K))*3.1V=1.33V
1.33/(20*0.02)=3.33A
PU5B LM358A_SO8
VS
PC49 0.01U_0402_25V7Z
PU5A LM358A_SO8
<33> BATT_OVP
PR66 845K_0603_1%
PR67 300K_0603_0.1%
PR71 143K_0402_1%
PC50 0.01U_0402_25V7Z
CP Point=3.06A
5V*(10K/(30.9k+10k))=1.222V
1.222V/(20*0.02)=3.06A
Charge voltage
3S CC-CV MODE : 12.6V
SEL is L
PR68 0_0402_5%
PR70 113K_0402_0.1%
PR75 10K_0402_0.1%
PC127 1000P_0402_50V7K
PC51 @0.01U_0402_25V7Z
@10K_0402_1% PR73
PR69 10K_0402_5%
PZD2 RLZ4.3B_LL34
PR74 10K_0402_5%
PD31 @RB751V_SOD323
PR72 10K_0402_5%
PC153 @1000P_0402_50V7K
ACIN <33>
Vin Detector
L->H 18.49 17.92 17.35
H->L 17.17 16.64 16.11
Security Classification
Compal Secret Data
Issued Date
2005/05/10
Deciphered Date
2006/05/10
THIS SHEET OF ENGINEERING DRAWING IS THE PROPRIETARY PROPERTY OF COMPAL ELECTRONICS, INC. AND CONTAINS CONFIDENTIAL AND TRADE SECRET INFORMATION. THIS SHEET MAY NOT BE TRANSFERED FROM THE CUSTODY OF THE COMPETENT DIVISION OF R&D DEPARTMENT EXCEPT AS AUTHORIZED BY COMPAL ELECTRONICS, INC. NEITHER THIS SHEET NOR THE INFORMATION IT CONTAINS MAY BE USED BY OR DISCLOSED TO ANY THIRD PARTY WITHOUT PRIOR WRITTEN CONSENT OF COMPAL ELECTRONICS, INC.
Compal Electronics, Inc.
Title
PWR-Charger
Size B
Document Number
Rev 0.3
Date: Thursday, August 18, 2005
Sheet 41 of 48
http://hobi-elektronika.net

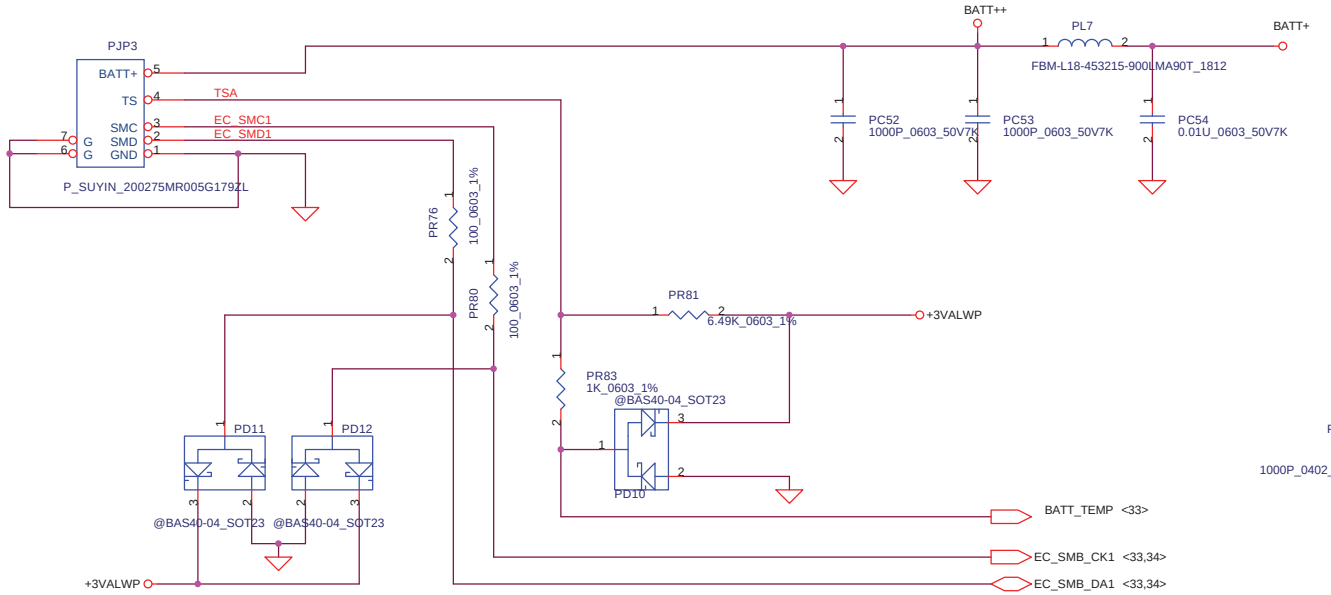

PH1 under CPU botten side :
CPU thermal protection at 85 degree C
Recovery at 70 degree C

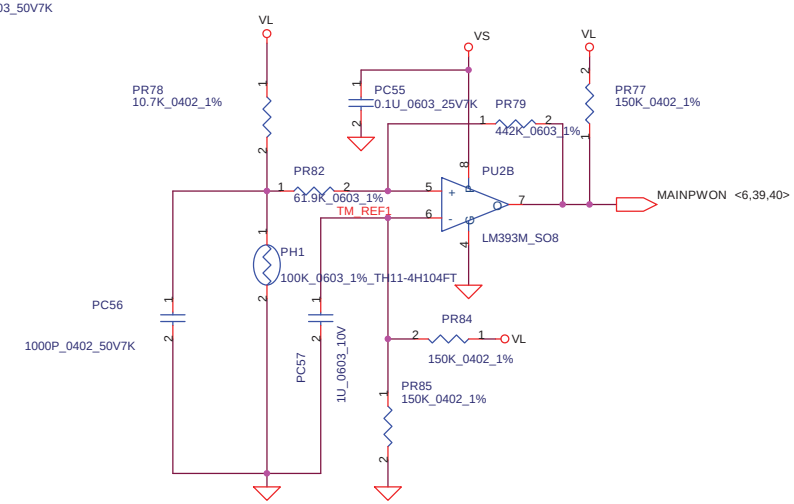

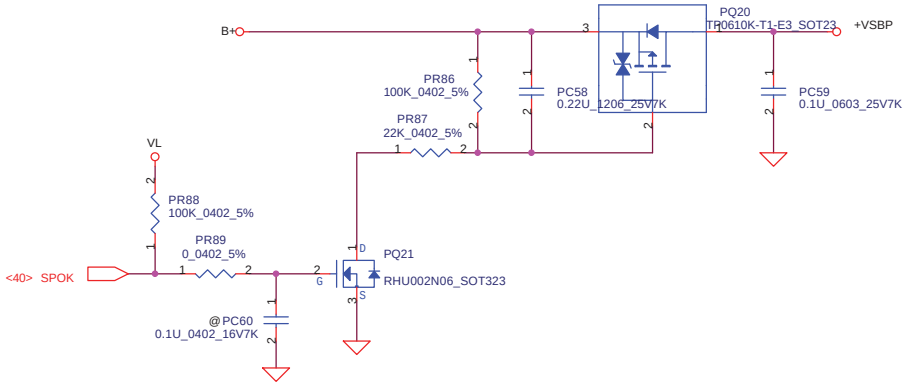

Security Classification	Compal Secret Data		
Issued Date	2005/05/10	Deciphered Date	2006/05/10

THIS SHEET OF ENGINEERING DRAWING IS THE PROPRIETARY PROPERTY OF COMPAL ELECTRONICS, INC. AND CONTAINS CONFIDENTIAL AND TRADE SECRET INFORMATION. THIS SHEET MAY NOT BE TRANSFERED FROM THE CUSTODY OF THE COMPETENT DIVISION OF R&D DEPARTMENT EXCEPT AS AUTHORIZED BY COMPAL ELECTRONICS, INC. NEITHER THIS SHEET NOR THE INFORMATION IT CONTAINS MAY BE USED BY OR DISCLOSED TO ANY THIRD PARTY WITHOUT PRIOR WRITTEN CONSENT OF COMPAL ELECTRONICS, INC.

Compal Electronics, Inc.

Title: BATTERY CONN. / OTP

Size: B | Document Number | Rev: 0.3

Date: Thursday, August 18, 2005 | Sheet 42 of 48

http://hobi-elektronika.net

+1.2VSP Current limit = 8.29A ~9.6A

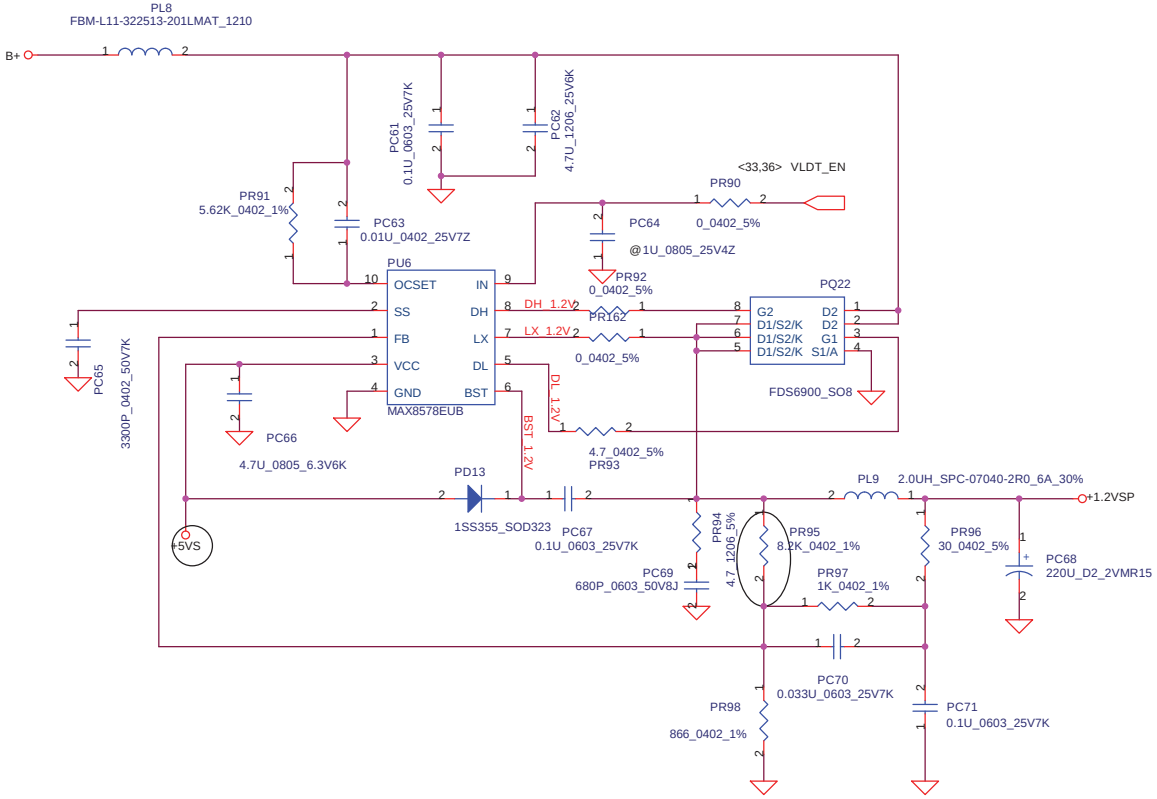

Security Classification	Compal Secret Data			Compal Electronics, Inc.
Issued Date	2005/05/10	Deciphered Date	2006/05/10	Title: +1.2VSP
				Size: B; Document Number; Rev: 0.3
				Date: Thursday, August 18, 2005; Sheet 43 of 48

THIS SHEET OF ENGINEERING DRAWING IS THE PROPRIETARY PROPERTY OF COMPAL ELECTRONICS, INC. AND CONTAINS CONFIDENTIAL AND TRADE SECRET INFORMATION. THIS SHEET MAY NOT BE TRANSFERED FROM THE CUSTODY OF THE COMPETENT DIVISION OF R&D DEPARTMENT EXCEPT AS AUTHORIZED BY COMPAL ELECTRONICS, INC. NEITHER THIS SHEET NOR THE INFORMATION IT CONTAINS MAY BE USED BY OR DISCLOSED TO ANY THIRD PARTY WITHOUT PRIOR WRITTEN CONSENT OF COMPAL ELECTRONICS, INC.

http://hobi-elektronika.net

+2.5VP O.C.P. =9A ~ 12.2A

+1.8VALWP Current limit = 9.55A ~12.76A

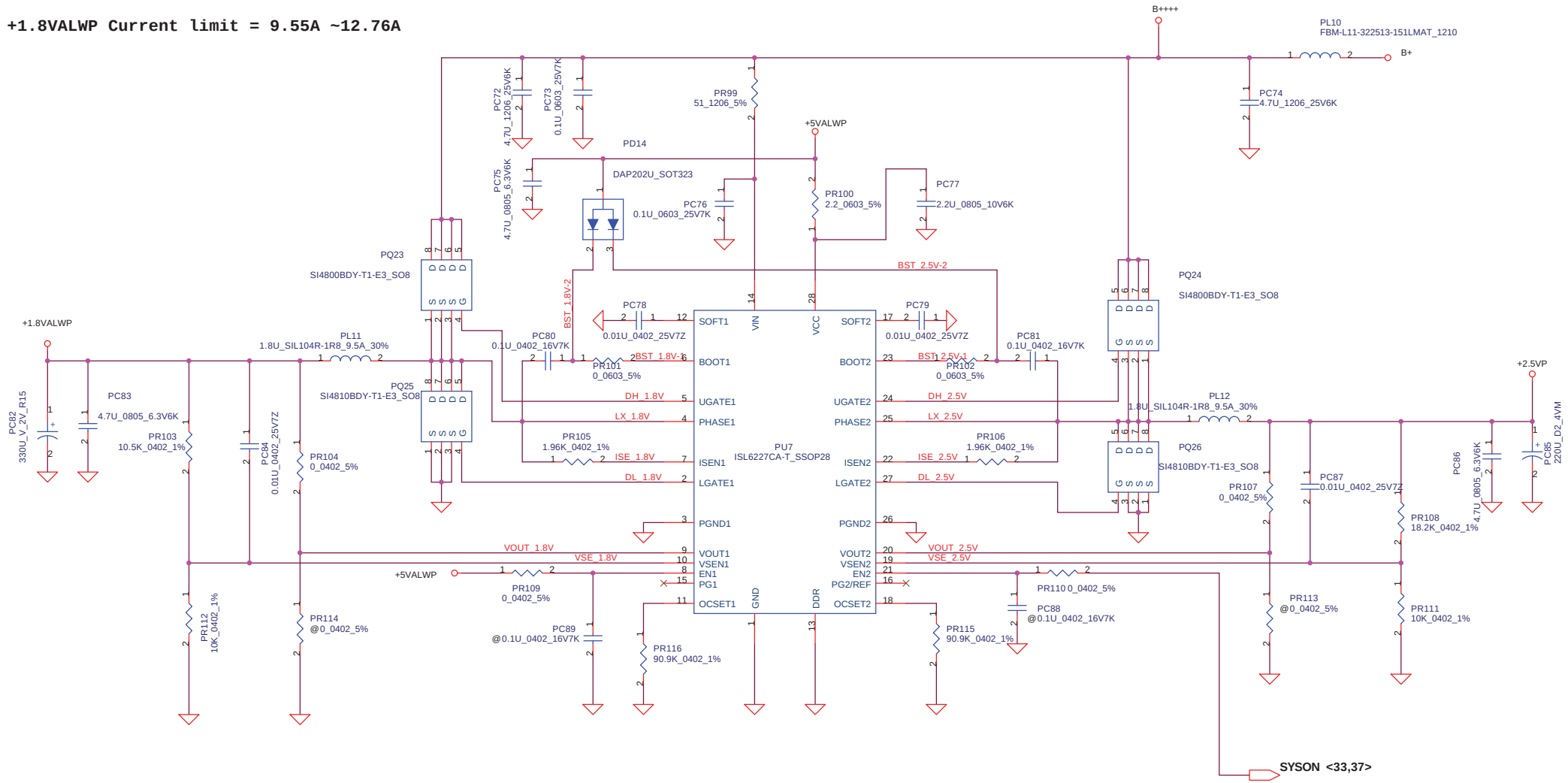

Security Classification	Compal Secret Data		
Issued Date	2005/05/10	Deciphered Date	2006/05/10

THIS SHEET OF ENGINEERING DRAWING IS THE PROPRIETARY PROPERTY OF COMPAL ELECTRONICS, INC. AND CONTAINS CONFIDENTIAL AND TRADE SECRET INFORMATION. THIS SHEET MAY NOT BE TRANSFERED FROM THE CUSTODY OF THE COMPETENT DIVISION OF R&D DEPARTMENT EXCEPT AS AUTHORIZED BY COMPAL ELECTRONICS, INC. NEITHER THIS SHEET NOR THE INFORMATION IT CONTAINS MAY BE USED BY OR DISCLOSED TO ANY THIRD PARTY WITHOUT PRIOR WRITTEN CONSENT OF COMPAL ELECTRONICS, INC.

Compal Electronics, Inc.

Title: +1.8VALWP/+2.5VP

Size: B | Document Number | Rev: 0.3

Date: Thursday, August 18, 2005 | Sheet 44 of 48

http://hobi-elektronika.net

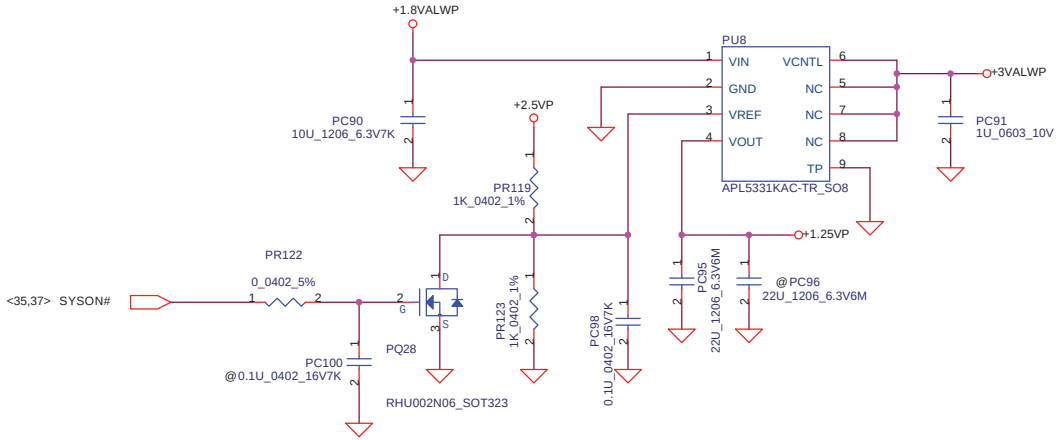

Security Classification	Compal Secret Data		
Issued Date	2005/05/10	Deciphered Date	2006/05/10

THIS SHEET OF ENGINEERING DRAWING IS THE PROPRIETARY PROPERTY OF COMPAL ELECTRONICS, INC. AND CONTAINS CONFIDENTIAL AND TRADE SECRET INFORMATION. THIS SHEET MAY NOT BE TRANSFERED FROM THE CUSTODY OF THE COMPETENT DIVISION OF R&D DEPARTMENT EXCEPT AS AUTHORIZED BY COMPAL ELECTRONICS, INC. NEITHER THIS SHEET NOR THE INFORMATION IT CONTAINS MAY BE USED BY OR DISCLOSED TO ANY THIRD PARTY WITHOUT PRIOR WRITTEN CONSENT OF COMPAL ELECTRONICS, INC.

Compal Electronics, Inc.

Title: +1.25VSP/+1.5VSP

Size: B | Document Number | Rev: 0.3

Date: Thursday, August 18, 2005 | Sheet 45 of 48

http://hobi-elektronika.net

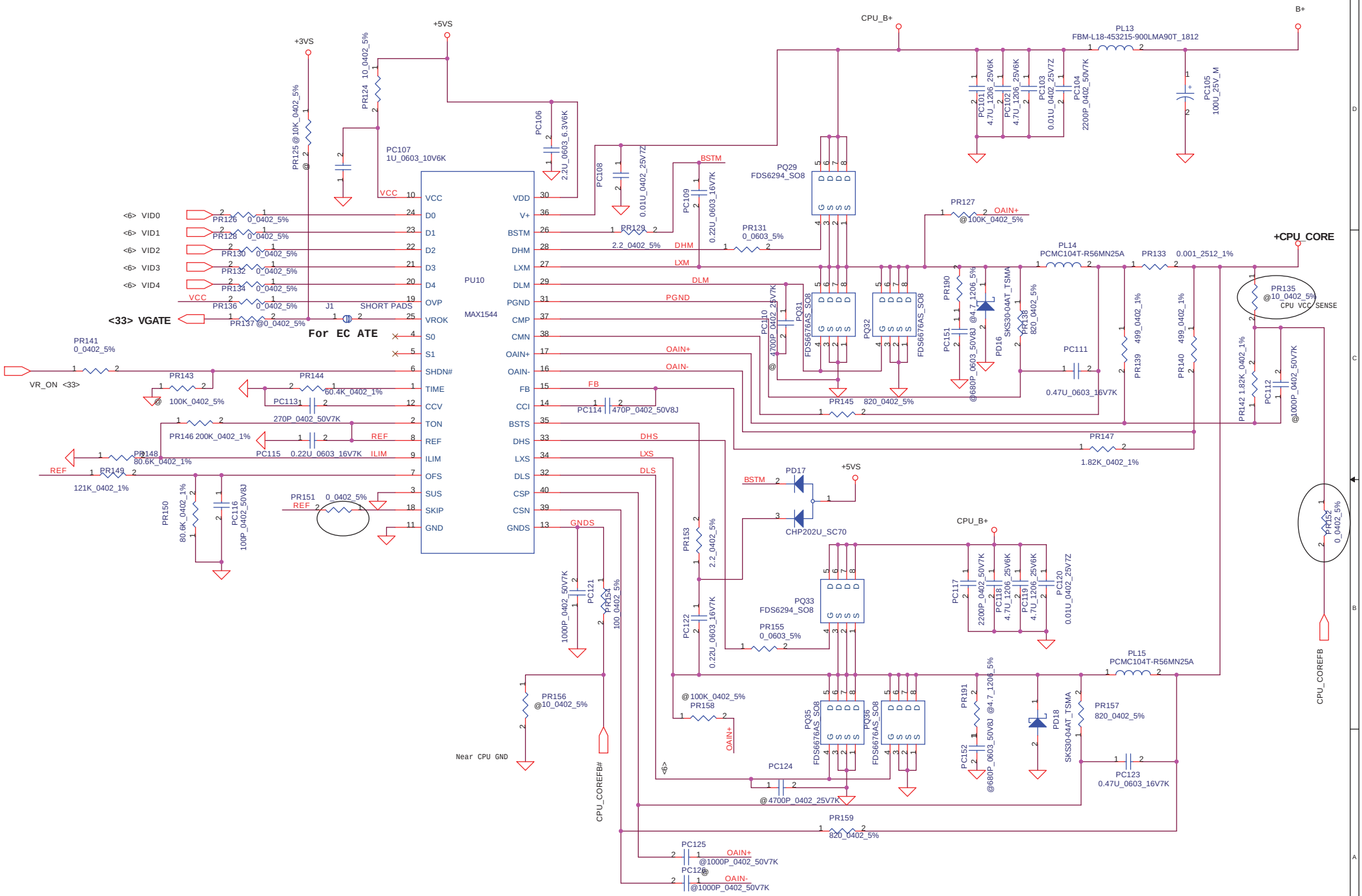

Security Classification	Compal Secret Data		
Issued Date	2005/05/10	Deciphered Date	2006/05/10

THIS SHEET OF ENGINEERING DRAWING IS THE PROPRIETARY PROPERTY OF COMPAL ELECTRONICS, INC. AND CONTAINS CONFIDENTIAL AND TRADE SECRET INFORMATION. THIS SHEET MAY NOT BE TRANSFERED FROM THE CUSTODY OF THE COMPETENT DIVISION OF R&D DEPARTMENT EXCEPT AS AUTHORIZED BY COMPAL ELECTRONICS, INC. NEITHER THIS SHEET NOR THE INFORMATION IT CONTAINS MAY BE USED BY OR DISCLOSED TO ANY THIRD PARTY WITHOUT PRIOR WRITTEN CONSENT OF COMPAL ELECTRONICS, INC.

Title: **+CPU_CORE**

Size: Custom | Document Number | Rev 0.3

Date: Thursday, August 18, 2005 | Sheet 46 of 48

http://hobi-elektronika.net

Version change list (P.I.R. List)

for PWR

Item	Fixed Issue	Reason for change	Rev.	PG#	Modify List	VER	Phase
1		add ACIN detect RC filter		42	add PD31,PC153		DVT
2		reverve or decrease CPU CORE ring with EMI solution : snubber		47	Reserve PR190//PR191: 4.7 1206 ,add PC151/PC152:680P		DVT
3		Modify 1.2VP voltage level		44	change PR95 from 6.81k to 8.2k		DVT
4		delete 1.2VP power good		44	delete PR164,PR163,PR165,PR166,PQ38,PQ39,PC128		DVT
5		delete Charger 3S/4S selector		42	delete PR160,PQ37		DVT
6							
7							
8							
9							
10							
11							
8							
9							

Compal Electronics, Inc.		
Title: PIR (PWR)		
Size	Document Number: LA-2931	Rev: 0.3
Date: Thursday, August 18, 2005	Sheet 47 of 48	

http://hobi-elektronika.net

Version change list (P.I.R. List)

Item	Fixed Issue	Reason for change	Rev.	PG#	Modify List	VER	Phase
1	1.Del +3V PWR		0.2	30,31			
2	1.Del Q3,C611,C609,C639,R341,Q24,R340		0.2	37			
3	1.Del JP6 2.PWR_SUSP_LED#/WL_ON_LED#/BT_ON_LED# conn to EC		0.2	36			
4	1.Del NET MSPWREN# 2.Del R561/R634 3.Change XDOC# to MSOC#		0.2	24/25			
5	1.change LAN LED PWR from +2.5V_LAN to +3VALW 2.DEL R856 3.Change Q52		0.2	26			
6	1.DEL MIC1 2.Change Q38		0.2	29			
7	1.Change U26 to G528 2.ADD C1656/R1379/R1380/L97/L98/L99/R1381~R1386		0.2	35			
8							
9							

http://hobi-elektronika.net

Security Classification	Compal Secret Data		
Issued Date	2005/03/08	Deciphered Date	2006/03/08

THIS SHEET OF ENGINEERING DRAWING IS THE PROPRIETARY PROPERTY OF COMPAL ELECTRONICS, INC. AND CONTAINS CONFIDENTIAL AND TRADE SECRET INFORMATION. THIS SHEET MAY NOT BE TRANSFERED FROM THE CUSTODY OF THE COMPETENT DIVISION OF R&D DEPARTMENT EXCEPT AS AUTHORIZED BY COMPAL ELECTRONICS, INC. NEITHER THIS SHEET NOR THE INFORMATION IT CONTAINS MAY BE USED BY OR DISCLOSED TO ANY THIRD PARTY WITHOUT PRIOR WRITTEN CONSENT OF COMPAL ELECTRONICS, INC.

Title	PIR (HW)	
Size Custom	Document Number EFL50 LA-2761	Rev 0.3
Date: Thursday, August 18, 2005	Sheet 48 of 48	